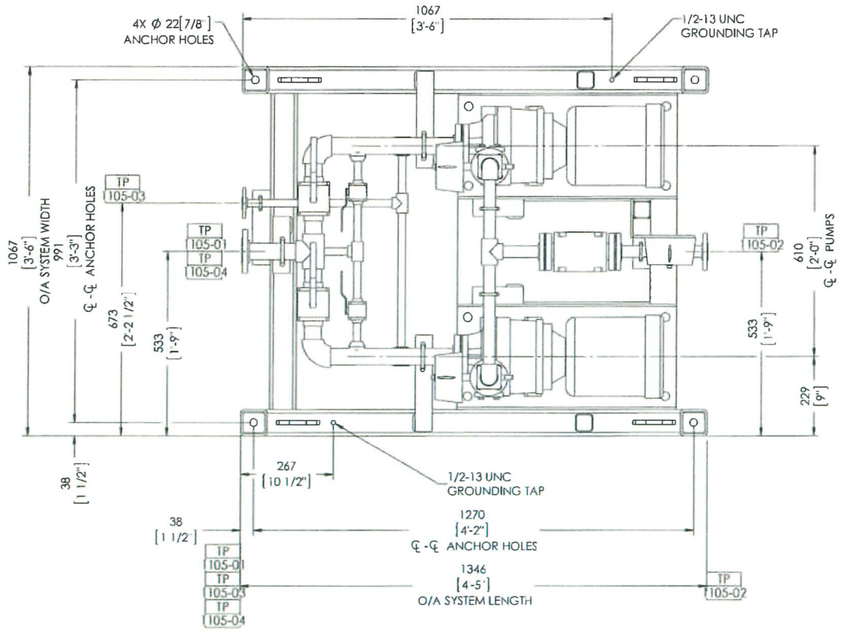

PLAN VIEW

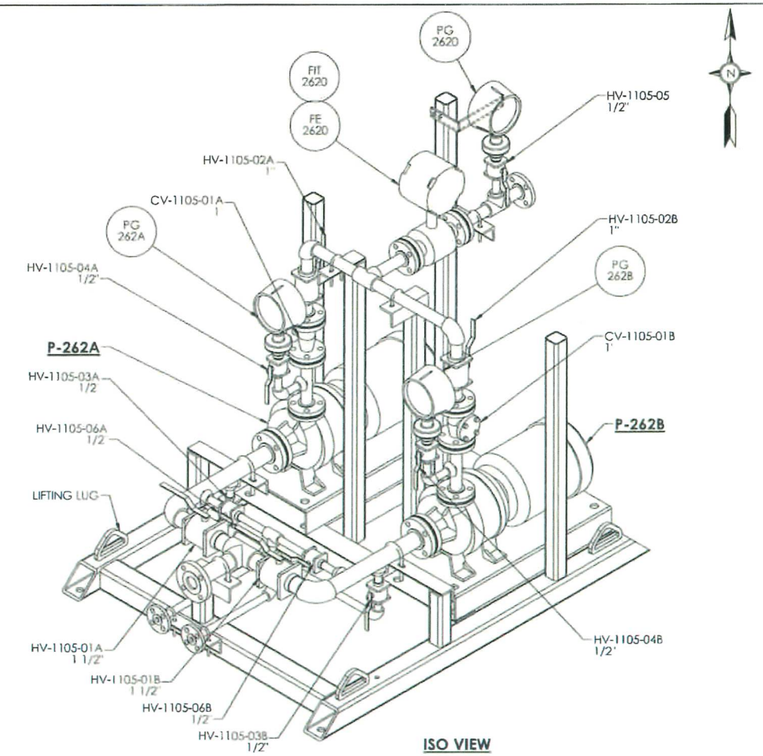

ISO VIEW

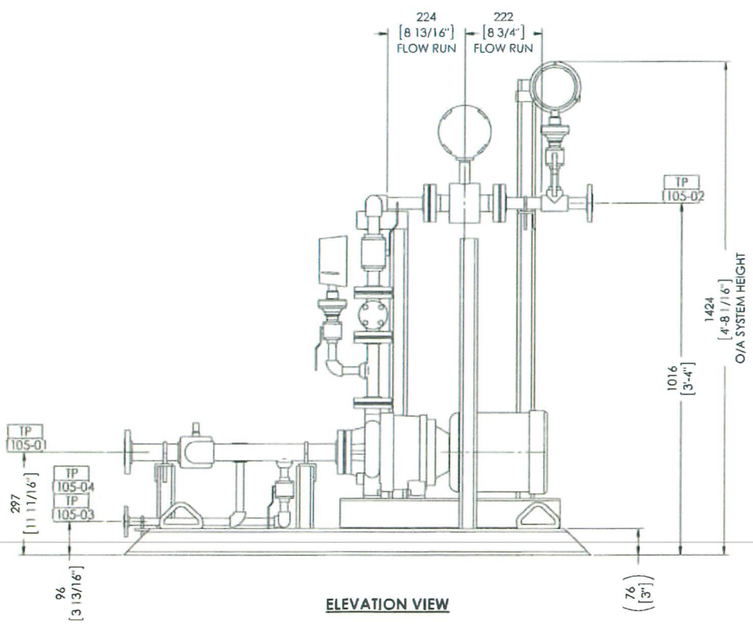

ELEVATION VIEW

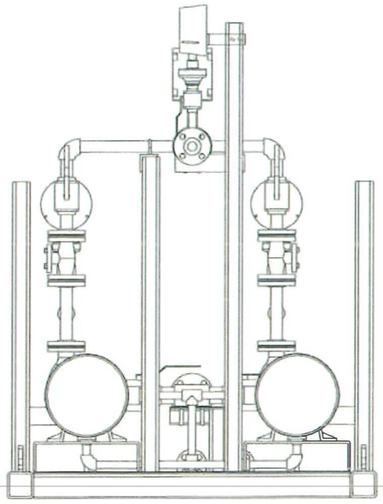

RIGHT SIDE VIEW

ANDERSON TERMINATION POINT LIST

TP No.	SIZE	RATING	DESCRIPTION
1105-01	1 1/2"	150#R.F	CAUSTIC INLET FROM TOTE
1105-02	1"	150#R.F.	CAUSTIC OUTLET TO DILUTION SKID
1105-03	1/2"	150#R.F.	CAUSTIC OUTLET TO DRAIN
1105-04	1/2	150# R.F.	CAUSTIC LINE FLUSH INLET

NOTES:

1. DIMENSIONS LOCATING TERMINATION POINTS MAY VARY ±9mm (±3/8").
2. ALL PIPING WILL BE ASSEMBLED AND TESTED BY A.W.S.
3. ALL BOLT HOLES TO STRADDLE MAJOR CENTER LINES.
4. SHIPPING WEIGHT: 545 kg (1200 Lbs).
   OPERATING WEIGHT: 590 kg (1300 Lbs).
5. PAINT SPECIFICATION: PNT - 120128.
6. PIPE SPECIFICATION: PS - 120128-316SS.
7. 6mm (1/4") CLEARANCE PROVIDED FOR ALL PIPE SUPPORTS.
8. DIMENSIONS SHOWN IN PARENTHESIS (XX) ARE FOR REFERENCE ONLY.
9. DIMENSIONS SHOWN qtyX dim e.g. 2X 3/8", ARE TYPICAL DIMENSIONS.
10. UNLESS OTHERWISE NOTED, UNIT TO HAVE MINIMUM 1219mm (4'-0") CLEARANCE ALL AROUND FOR ACCESS.
11. (B) FOUNDATION LOADING CHART: DWG#120128-0001-1-FL-001.

CAUSTIC DILUTION PUMPS

GOULDS MODEL 3298-XS, 1"x 1.5"
CASING CONSTRUCTION: DUCTILE IRON/TEFZEL LINED
IMPELLER CONSTRUCTION: CFR TEFZEL
DESIGN FLOW: 41 m3/D (7.5 USGPM) (EACH)
DESIGN PRESS.: 345 kPag (50 PSIG)
MOTOR: 3 HP/3500 RPM
TEFC 460 V/3 PH/60 Hz

WOOD GROUP PSN ISSUED FOR
SEP 19 2013
INFORMATION

THIS DRAWING, ALL INFORMATION AND KNOWLEDGE CONTAINED OR REFERRED HEREIN ARE THE CONFIDENTIAL AND PROPRIETARY PROPERTY OF ANDERSON WATER SYSTEMS ("AWS") AND AS SUCH ARE INSTRUMENTS OF SERVICE FOR USE SOLELY WITH RESPECT TO THIS PROJECT. THESE INSTRUMENTS OF SERVICE SHALL NOT BE REPRODUCED, TRANSMITTED, DISCLOSED OR USED OTHERWISE IN WHOLE OR IN PART WITHOUT THE WRITTEN AUTHORIZATION OF ANDERSON WATER SYSTEMS.

REV	REVISION DESCRIPTION	DRAWN	CHECKED	APP	DATE
A	ORIGINAL ISSUE	FY	MG	DP	OCT 22 12
B	REVISED PER CUSTOMER & ENGINEERING COMMENTS	FY	MG	DP	DEC 19 12
C	REVISED PER CUSTOMER COMMENTS	FY	MG	DP	MAR 22 13

PROJECT INFORMATION

ZARGON LITTLE BOW ASP FACILITY
LSD 16-31-14-18 W4M (C)

CONTRACT NUMBER:
120128

ANDERSON WATER SYSTEMS
1295 CORMORANT RD, SUITE 200
Ancaster, Ontario
L9G 4V5 Canada
Phone: +1(289) 346-1000 (C)
www.AWSL.com

	BY	DATE
DRAWN	FY	OCT 22 12
CHECKED	MG	OCT 22 12
APP	DC	OCT 22 12
REF. 120128-0001-1-PID-003		
SCALE	NTS	
SHEET	1 OF 1	

CAUSTIC DILUTION PUMPS
GENERAL ARRANGEMENT

SIZE D | DWG NO 120128-1105-1-GA-001 | REV C

STATUS :

LAST SAVED : Saturday, March 23, 2013 9:26:43 AM