CONFIDENTIAL

Design Code Field Approval
Appliance Approved

for

Coyote North Ltd.

Owner / Operator:	**Nuvista Energy Ltd**
Plant:	**Wapiti**
Area:	**Wapiti**
LSD:	**02-16-68-08-W6**
Tag Number:	
Appliance Type:	**Line Heater**
Appliance Serial No:	**1456101**



Report / Print Date:	**08/29/2015**
ENEFEN Project:	**NFN1503083**

Attention

This Appliance is approved and may be operated.
This package contains a rating/approval plate that must be attached to the appliance and may be subject to an inspection by the Authority Having Jurisdiction.

ENEFEN Energy Efficiency Engineering Ltd.

Suite 705, 101-5101 50th Ave. • Leduc, AB T9E 0B9 • +1-780-665-2863 • Fax: +1-866-583-0520
www.ENEFEN.com

TABLE OF CONTENTS

REPORT SECTIONS IN THIS REPORT

Report Section
Report Cover
Table of Contents
Field Approval Certificate
Project Information
Project Summary
Appliance Data
Inspection Photos
Bill of Materials
Rating Plate Information
Fuel Composition
Piping and Instrumentation Diagram
System Wiring Diagram

Copyright © ENEFEN Energy Efficiency Engineering Ltd. 2012-2013 All rights reserved.
No part of this report may be reproduced in any form whatsoever without the prior written permission of ENEFEN.

FIELD APPROVAL CERTIFICATE

FIELD APPROVAL FA1503083 20150829_1330
REPORT DATE 29 AUG 2015
PROJECT DESCRIPTION: Design Code Field Approval

Prepared By	Curtis Morley BSc
Reviewed By	Rodger Talstra P.Eng.
Client / Consultant	Coyote North Ltd.
Contact	Brent Willey
Email	brent.willey@coyotenorth.ca
Tel	780-357-8917
Cell	780-831-6822
Fax	
Owner / Operator	Nuvista Energy Ltd

Plant	Wapiti
Area	Wapiti
Elevation	2612 ft | 796 m
Jurisdiction	AB
Process	Wellsite
Function	Indirect Fired Gas Heating
Appliance	Line Heater
Appliance Tag	
LSD	02-16-68-08-W6
Serial Number	1456101

INSPECTION BODY REQUIREMENTS USED AS BASIS FOR FIELD APPROVAL:

- ISO/IEC 17020:2012
- Standards Council of Canada CAN-P-1608 Appendix C: Commercial and Industrial Gas-Fired Appliances and Equipment
- Any or all of the current versions of the following:
  - CAN/CSA-B149.1 Natural gas and propane installation code
  - CAN/CSA-B149.2 Propane storage and handling code
  - CAN/CSA-B149.3 Code For The Field Approval Of Fuel-Related Components On Appliances and Equipment
  - CAN/BNQ 1784-000 Canadian Hydrogen Installation Code
  - CSA B51 Boiler, pressure vessel and pressure piping code
  - CSA STD C22.1 Canadian Electrical Code, Part I Safety Standard for Electrical Installations
  - CSA STD C22.2 No. 0-M91 (R2006) General Requirements - Canadian Electrical Code, Part II
  - Variances or provincial deviations (such as VAR-GAS-05-05{rev 2} Gas Safety Variance on the application of CAN/CSA-B149-3.05, Alberta Municipal Affairs, Safety Codes Council) as may be issued from time to time by the Provincial or Territorial Regulatory Authority
  - Relevant requirements of the National Building Code of Canada and the National Fire Code of Canada

SCOPE:
Our FIELD APPROVAL is limited only to the safety aspects of the combustion system as required by the above regulations and does not include other design aspects, such as detailed compliance with the project or owner specifications, and the suitability of the equipment for any specific purpose, process conditions or performance requirements. We base our acceptance in this regard on a general statement of compliance with project specifications, and on documentation received for evaluation.

FIELD APPROVAL VALIDITY:
Under the authority of the Alberta Safety Codes Act, Chapter S-1 Section 38(1) and Alberta Municipal Affairs File: 16570-G01 Province Wide Variance VAR-GAS-01-13 (July 1, 2013): Engineered Designs For Site Specific Gas-Fired Process Equipment.

APPROVED BY:
Jozef Jachniak, P. Eng.

APPROVED DATE:
28 Aug 2015

PERMIT TO PRACTICE:
P08977



FIELD APPROVAL COMPLETE
APPROVAL DETAILS ARE IN THE APPLIANCE DATA REPORT

Suite 705, 101-5101 50th Ave. • Leduc, AB T9E 0B9 • +1-780-665-2863 • Fax: +1-866-583-0520
www.ENEFEN.com
ENEFEN Energy Efficiency Engineering Ltd.

PROJECT INFORMATION 20150829_1330

ENEFEN number	NFN1503083
Product	Design Code Field Approval
Design code	301A-P2-NF003
Project description	
Jurisdiction	AB

Appliance Identification

Process	Wellsite
Function	Indirect Fired Gas Heating
Type	Line Heater
Tag Number	
LSD	02-16-68-08-W6
Plant	Wapiti
Area	Wapiti
Serial Number	1456101
Site elevation	796 m
CRN number	
A number	

Appliance Information

Manufacturer	Enlyn Corporation
Project number	
Built where	Red Deer AB
Date built	2015
Model number	
Installed by	Coyote North Ltd.
Project number	150060
New or upgrade	New Install
Date	February 2015

PROJECT INFORMATION

Client Information

Company name	Coyote North Ltd.		
Project number	150060		
Branch/plant	Grande Prairie		
Department/area			
Contact name	Brent Willey		
Contact email	brent.willey@coyotenorth.ca		
Contact phone	780-357-8917	**Extension**	
Contact cell	780-831-6822	**Fax**	

Owner/Operator Information

Company name	Nuvista Energy Ltd		
Project number			
Branch/plant	Wapiti		
Department/area	Wapiti		
Contact name	Larry Gordey		
Contact email	larrygordey@gmail.com		
Contact phone	780-818-2330	**Extension**	
Contact cell	780-818-2330	**Fax**	

Consultant Information

Company name	Coyote North Ltd.		
Project number			
Branch/plant	Grande Prairie		
Department/area			
Contact name	Brent Willey		
Contact email	brent.willey@coyotenorth.ca		
Contact phone	780-357-8917	**Extension**	
Contact cell	780-831-6822	**Fax**	

PROJECT SUMMARY

20150829_1330

NFN Number	NFN1503083	Product Type	Design Code Field Approval		
Design Code	301A-P2-NF003	Project Status	Appliance Approved		
Inspected By	Travis Todd	Owner	Nuvista Energy Ltd	LSD	02-16-68-08-W6
Inspected	07/29/2015	Plant	Wapiti	Tag	
Prepared By	Curtis Morley BSc	Area	Wapiti	Serial	1456101
Reviewed By	Rodger Talstra P.Eng.	Contact	Brent Willey	Phone	780-357-8917

CODE COMPLIANCE SUMMARY

Fuel train layout compliant?	Yes
Fuel train sizing compliant?	Yes
Fuel train installation compliant?	Yes
Burner design compliant?	Yes
Burner installation compliant?	Yes
BMS FSG design compliant?	Yes
BMS FSG installation compliant?	Yes
Permissives design compliant?	Yes
Permissives installation compliant?	Yes
Controls design compliant?	Yes
Controls installation compliant?	Yes
Appliance design compliant?	Yes
Appliance installation compliant?	Yes
Panel electrical inspection?	NA
Electrical seals installed?	Yes
Electrical installation compliant?	Yes
Flammable gas venting compliant?	Yes
Gas piping installation compliant?	Yes
Stack installation compliant?	Yes
All components certified or approved?	Yes
All technical documentation complete?	Yes
System compliant with current gas & electrical codes	Yes

RECOMMEND Correction is recommended but not required for compliance

Line Pressure Regulator	Fisher 627 ~ 1/8in. orifice ~ 35-80psig spring ~ 1000psig max inlet ~ -29oC | Recommend changing orientation so that bonnet is horizontal or vertical. Currently it is facing down, so diaphragm could get flooded with fluid.	Recommend
Burner Capacity Utilization	387 % | Burner is extremely overfired. Recommend reviewing burner and fuel input design and contacting the burner manufacturer for safety concerns.	Recommend
Are Vent Terminations Equipped With Screens	No. The following terminations should have screens, Upstream overpressure protection (PSV) | Install screens on all vent terminations 1/2in and larger.	Recommend
Are Vent Line Terminations Protected From Water Entry	No. The following vents are not protected, Upstream PRV, Overpressure safety relief valve (PSV) | Vent terminations must be directed downward.	Recommend
Stack Temperature Notes	High. Stack temp between 350-650oF/175-340oC above bath temp. May result in lower efficiency. Recommend review of the combustion design. Adjustment of the burner and combustion air flow may be necessary.	Recommend
Excess Air Notes	O2 is in the high range of 5.5-8.0% and results in lower efficiency Recommend review of the combustion design. Adjustment of the burner and secondary air flow may be necessary.	Recommend

APPLIANCE DATA

20150829_1330

NFN Number	NFN1503083	Product Type	Design Code Field Approval		
Design Code	301A-P2-NF003	Project Status	Appliance Approved		
Inspected By	Travis Todd	Owner	Nuvista Energy Ltd	LSD	02-16-68-08-W6
Inspected	07/29/2015	Plant	Wapiti	Tag	
Prepared By	Curtis Morley BSc	Area	Wapiti	Serial	1456101
Reviewed By	Rodger Talstra P.Eng.	Contact	Brent Willey	Phone	780-357-8917

128	LOCATION INFORMATION	
Burner Location	Outdoor	Noted
Fuel Train Location	Heated enclosure	Noted
Control Panel Location	Outdoor	Noted
Maximum Design Ambient Temperature	40 deg C | 104 deg F	Noted
Minimum Design Ambient Temperature	-29 deg C | -20 deg F	Noted

161	PROCESS INFORMATION	
Process Cycle %	100 %	Noted
Annual Operation %	100 %	Noted
Appliance Function	Indirect Fired Gas Heating	Noted
Appliance Type	Line Heater	Noted
Combustion Air Source	Natural Draft	Noted
Combustion Air Preheat	No preheat	Noted
Minimum Combustion Air Temperature	-40 deg C | -40 deg F	Noted
Bath Fluid	50/50 Ucartherm	Noted
Bath Fluid Temperature	52 deg C | 126 deg F	Noted
Bath Fluid Pressure	0 kPag | 0.0 psig	Noted

162	APPLIANCE INFORMATION	
Process Duty	1.50 GJ/h | 1.42 MM Btuh	Noted
Appliance Efficiency HHV	73.3 %	Noted
Fuel Total Input (HHV)	2.04 GJ/h | 1.94 MM Btuh	Noted
Flame Safeguard System Logic Type	Single Burner FSG	Noted
Number of Burners	1	Noted
Burner Fuel Input (HHV)	2.041 GJ/h | 1.935 MM Btuh	Noted
Main Burner Max. Design Pressure	82.7 kPag | 12.0 psig	Noted
Main Burner Min Design Pressure	6.9 kPag | 1.0 psig	Noted
Pilot Configuration	Separate venturi style pilot	Noted
Pilot Type	Intermittent / Continuous	Noted
Pilot Fuel Input (HHV)	0.03 GJ/h | 0.03 MM Btuh	Noted
Pilot Pressure	34.5 kPag | 5.0 psig	Noted
Ignition Type	Electric ignition from BMS	Noted
Instrument Control Method	Pneumatic / Electric	Noted
Is it a Pressure Vessel?	No. Process Pipes are pressurized but heater shell is not.	Noted
CRN Number	3264.213	Noted
"A" Number	640432	Noted
Vessel Design Pressure	21546 kPag | 3125.0 psig	Noted
Vessel Design Temperature	93 deg C | 200 deg F	Noted

163	MAIN FUEL SUPPLY

Main Fuel Type	Sales Spec Natural Gas	Noted
Is Main Fuel Sweet?	Sweet	Noted
Is Main Fuel Dry?	Dry	Noted
Main Fuel Source	Sales Gas pipeline	Noted
Main Fuel Composition Known	Yes. Fuel composition report attached.	Noted
Main Fuel Inlet Pressure	531 kPag | 77.0 psig	Noted
Main Fuel Odorization	Not Odorized	Noted
Main Fuel Scrubber	Mechanical Scrubber	Noted
Main Fuel Filter	Y-Strainer in main fuel train.	Noted
Main Fuel Overpressure Protection	PSV on the scrubber protects the main PRV.	Noted
Main Fuel PSV	Taylor	Noted
Main Fuel PSV Setpoint	1034 kPag | 150.0 psig	Noted
Main Fuel Preheat	Preheat through bath fluid	Noted
Line Pressure Regulator	Fisher 627 ~ 1/8in. orifice ~ 35-80psig spring ~ 1000psig max inlet ~ -29oC | Recommend changing orientation so that bonnet is horizontal or vertical. Currently it is facing down, so diaphragm could get flooded with fluid.	Recommend
Line Pressure Regulator Setpoint	530.90 kPag | 77.00 psig	Noted

164 SECONDARY FUEL SUPPLY

Secondary Fuel Type	Not approved for secondary fuel use	Noted

165 PILOT FUEL SUPPLY

Pilot Fuel Type	Sales Spec Natural Gas	Noted
Is Pilot Fuel Sweet?	Sweet	Noted
Is Pilot Fuel Dry?	Dry	Noted
Pilot Fuel Source	Same as main fuel	Noted
Pilot Fuel Composition Known	Same as main fuel.	Noted
Pilot Fuel Inlet Pressure	82.7 kPag | 12.0 psig	Noted
Pilot Fuel Odorization	Not Odorized	Noted
Pilot Fuel Scrubber	Same as Main Fuel	Noted
Pilot Fuel Filter	Y-Strainer in main fuel train.	Noted
Pilot Fuel Overpressure Protection	PSV integral to main fuel train PRV protects the pilot PRV.	Noted
Pilot Fuel PSV Setpoint	234 kPag | 34.0 psig	Noted
Pilot Fuel Preheat	Preheat through bath fluid	Noted

170 INSTRUMENT GAS INFORMATION

Instrument Gas Type	Sales Spec Natural Gas	Noted
Instrument Gas Pressure Minimum	69 kPag | 10.0 psig	Noted
Instrument Gas Pressure Maximum	310 kPag | 45.0 psig	Noted
Is Instrument Gas Dry?	Dry	Noted
Instrument Gas Source	Main fuel train upstream of main regulator	Noted
Instrument Gas Inlet Pressure	530.90 kPag | 77.0 psig	Noted
Instrument Gas Filter	Integral to Fisher 67CFR.	Noted
Instrument Gas Overpressure Protection	PSV integral to instrument gas PRV	Noted
Instrument Gas PSV Setpoint	186.16 kPag | 27.0 psig	Noted
Instrument Gas PRV	Fisher 67CFR ~ 0-35psi spring ~ 250psi max inlet ~ -29oC	Noted
Instrument Gas PRV Setpoint	165 kPag | 24.0 psig	Noted

APPLIANCE DATA

172 ELECTRICAL INFORMATION

Electrical Area Classification at Burner	Unclassified	Noted
Electrical Area Classification at Fuel Train	Class 1 Zone 1	Noted
Electrical Area Classification at Control Panel	Class 1 Zone 2	Noted
Available Primary Control Power	24 VDC	Noted
Available Primary Control Power Source	TEG	Noted
Maximum Primary Control Power Amps	5.0 amps	Noted
All Electrical Seals Installed?	Yes.	Noted
Is all electrical wiring properly installed	Yes.	Noted
Is all required grounding present?	Yes.	Noted

181 HEATER SHELL

Shell Type	Horizontal with expansion tank above	Noted
Shell OD	1626 mm | 64.00 in	Noted
Shell Length / Height	8 m | 25.00 ft	Noted
Shell Insulation Scope	Fully insulated without end plates	Noted
Shell Insulation Thickness	51 mm | 2.00 in	Noted

182 HEATER FIRETUBE

Number of Firetubes	1	Noted
Firetube Type	Horizontal U-tube with constant diameter.	Noted
Number of Passes	2	Noted
Firetube OD	610 mm | 24.00 in	Noted
Immersed Length of Assembly	7 m | 24.00 ft	Noted
Firetube Surface Area	32 m2 | 343 ft2	Noted
Firetube Nominal Process Rating	3.62 GJ/h | 3.43 MM Btuh	Noted
Firetube Design Heat Flux	47.00 MJh/m2 | 4137 Btuh/ft2	Noted
Firetube Achievable Efficiency (HHV)	80.4 %	Noted
Firetube Appliance Efficiency HHV	73.3 %	Noted
Firetube Condition	Firetube acceptable	Noted

183 HEATER STACK

Stack Type	Same diameter as firetube	Noted
Stack OD	610 mm | 24.00 in	Noted
Stack Height	5 m | 16.00 ft	Noted
Stack Wind Shroud	None	Noted
Stack Cap	Yes	Noted
Stack Damper	None	Noted
Stack Insulation Scope	None	Noted
Drain Port Plug	Not installed	Noted
Stack Cleanout Port	Plug on stack elbow	Noted
Air Preheat Sleeve	No.	Noted
Stack Sampling Port	Drilled hole with plug.	Noted

184 HEATER WINDBOX

Windbox Manufacturer	Flameco Industries Inc.	Noted
Windbox Serial Number	1409 33K	Noted

Windbox Material	Aluminum Welded	Noted
Windbox Type	Round with door	Noted
Wind Box Gasket	All required gaskets are installed and in good condition.	Noted
Windbox ID	914 mm | 36.00 in	Noted
Windbox Depth	457 mm | 18.00 in	Noted
Windbox Volume	0.300 m3 | 10.603 ft3	Noted
Windbox Size Factor	0.147 m3/GJh | 5.48 ft3/MM Btuh	Noted
Windbox Gas CL to Liquid	102 cm | 40 in	Noted
Windbox Gas CL to Burner Tip	122 cm | 48 in	Noted
Burner tip insertion depth	20 cm | 8 in	Noted
Burner Access	Hinged front door with quick release	Noted
Windbox Air Adjustment	None	Noted
Windbox Viewport	1 inch Peep Sight	Noted
Is the Ignition Transformer Module mounted correctly	Yes.	Noted

185 HEATER FLAME CELL

Number of Flame Cells Per Windbox	1	Noted
Flame Cell Material	Aluminum	Noted
Flame Cell Location	Front	Noted
Flame Cell OD	914 mm | 36.00 in	Noted
Flame Cell ID	152 mm | 6.00 in	Noted
Total Flame Cell Surface Area	0.64 m2 | 6.87 ft2	Noted
Flame Cell Size Factor	0 m2/GJh | 3.55 ft2/MM Btuh	Noted

186 HEATER MAIN BURNER

Burner Make	Maxon	Noted
Burner Size	2 in ~ 51 mm	Noted
Burner Mixer	Maxon Ventite	Noted
Main Burner Orifice Size	9/32 in | 7.1450mm | 0.2813in	Noted
Burner Sleeve	Maxon	Noted
Burner Nozzle	Sticktite ~ Maxon	Noted
Burner Fuel Input Capacity (HHV)	0.528 GJ/h | 0.500 MM Btuh	Noted
Burner Capacity Utilization	387 % | Burner is extremely overfired. Recommend reviewing burner and fuel input design and contacting the burner manufacturer for safety concerns.	Recommend

187 HEATER PILOT BURNER

Pilot Make	Profire	Noted
Pilot Size	1/2 in | 12.7mm | 0.50in	Noted
Pilot Mixer	Profire venturi	Noted
Pilot Burner Orifice Size	#60 | 1.0160mm | 0.0400in	Noted
Pilot Sleeve	Straight Pipe Nipple	Noted
Pilot Nozzle	Profire RHSB	Noted
Pilot Location	At 12:00 position to main burner	Noted

188 COMBUSTION AIR CONTROL

Primary Air Control Type	At burner mixer with air shutter	Noted
Secondary Air Control Type	Profire adjustable secondary airplate	Noted

189 HEATER PERMISSIVES

Bath LSLL Location	In the main tank above firetube.	Noted
Bath LSLL Type	Single point electric float	Noted
Bath LSLL Make	SOR ~ 1510 ending with CS ~ Class1-Zone1 ~ -40oC	Noted
Level Switch Orientation	Level switch correctly installed.	Noted
TSHH Location	In the main tank	Noted
TSHH Type	Thermocouple directly to BMS	Noted
TSHH Setpoint	60 deg C | 140.00 deg F	Noted
TSHH Separate From TSH	Yes.	Noted
Fuel Gas PSLL Location	Upstream of SSVs	Noted
Fuel Gas PSLL Type	Electric pressure switch	Noted
Fuel Gas PSLL Make	CCS 6900GZE12 ~ 3-20psi range ~ 2psi deadband ~ Class1-Zone1 ~ -40oC	Noted
Fuel Gas PSLL Setpoint	41.4 kPag | 6.0 psig	Noted
Fuel Gas PSHH Location	Downstream of main fuel FCV	Noted
Fuel Gas PSHH Type	Electric pressure switch	Noted
Fuel Gas PSHH Make	CCS 6900GZE12 ~ 3-20psi range ~ Class1-Zone1 ~ -40oC	Noted
Fuel Gas PSHH Setpoint	103.4 kPag | 15.0 psig	Noted
Isolation Valves Installed on Pressure Switch PSHH	1/4 turn isolation valve locked and tagged.	Noted
Isolation Valves Installed on Pressure Switch PSLL	1/4 turn isolation valve locked and tagged.	Noted
Plant ESD Connected	Yes.	Noted

190 HEATER BMS/FSG

BMS Type	Prepackaged / CSA 22.2 Certified.	Noted
BMS Make	Profire 2100 ~ CSA22.2 No.199-2007 ~ Class1-Zone2 ~ -40oC	Noted
Flame Sensor	Flame Rod	Noted
Expansion Card	No expansion cards are installed.	Noted
Remote BMS Connections	Interlocks to plant control system, ESD, Status	Noted
BMS Serial Number	1PS21-E0000-L47096	Noted
BMS Temperature Input	Dual K type thermocouples.	Noted
TSHH Interlocked with BMS	Yes.	Noted

192 HEATER CONTROL SYSTEM

Process Control Element Location	TE In the main tank	Noted
Process Controller Type	ON / PILOT / OFF	Noted
Controller Temperature Setpoint	54 deg C | 129 deg F	Noted
Pilot off	58 deg C | 136 deg F	Noted
Process Controller Make	Temperature controlled via BMS.	Noted
TSH Type	Thermocouple directly to BMS	Noted
Fuel FCV Make	Kimray 1400 SMT PO ~ 10-45psi actuation ~ -34oC	Noted
FCV 3-way Solenoid	ASCO EF8314G301 ~ Class1-Zone1 ~ 150psi max ~ -40oC ~ Clean&Dry Gas	Noted
FCV Speed Control Valve	SMC NAS4000-N02	Noted
Fuel Low Fire Start	Pneumatic FCV downstream of SSV with 3-way valve and speed control.	Noted
Fuel Minimum Fire Stop	Not installed.	Noted
Low Fire Start For System Over 1 MM Btuh	Yes.	Noted

193 HEATER MAIN FUEL TRAIN

Main Fuel Manual Shut-off Valve	Neo ~ 2500-series ball valve ~ CGA 3.16 ~ -40oC	Noted
Main Fuel Train Filter	Y-Strainer	Noted
Is Appliance Manual Fuel Shutoff Easily Accessible	Yes	Noted
Main Fuel PRV Configuration	Single main fuel PRV.	Noted
Appliance Main Fuel PRV	Fisher 627R ~ 1/2in. orifice ~ 5-20psi spring ~ 200psi max inlet ~ -29oC	Noted
Appliance Fuel PRV Setpoint	82.7 kPag | 12.0 psig	Noted
Appliance Fuel PSV Configuration	PSV integral to main PRV	Noted
Main Fuel Train PSV Setpoint	234.4 kPag | 34.0 psig	Noted
Main Safety Shutoff Valve Configuration	Dual SSV's	Noted
Main Safety Shutoff Valve Type	Electric Solenoid(s)	Noted
Main Upstream Safety Shutoff Valve Make	ASCO HV285926002 24VDC ~ CSA 6.5-C/I ~ Class1-Zone1 ~ 35psi MOPD ~ 100psi MAWP ~ -40oC/-10oC	Noted
Main Downstream Safety Shutoff Valve Make	ASCO HV285926002 24VDC ~ CSA 6.5-C/I ~ Class1-Zone1 ~ 35psi MOPD ~ 100psi MAWP ~ -40oC/-10oC	Noted
Main SSV(s) Slow Opening	No	Noted
Main Burner Test Firing Valve	Neo ~ 2500-series ball valve ~ CGA 3.16 ~ -40oC	Noted
Are pressure gauge locations adequate	Yes.	Noted
Are pressure gauge ranges adequate	Yes.	Noted
Are pressure test points adequate	Yes.	Noted
Main Fuel Train Piping	Carbon steel piping	Noted
Sufficient unions / flanges for maintenance	Yes.	Noted
Is Piping Adequately supported	Yes.	Noted

194 HEATER PILOT FUEL TRAIN

Pilot Fuel Takeoff	From downstream of main filter and regulator.	Noted
Pilot Fuel Manual Shut-Off Valve	Neo ~ 2500-series ball valve ~ CGA 3.16 ~ -40oC	Noted
Pilot PRV	Fisher 67CFR ~ 0-35psi spring ~ 250psi max inlet ~ -29oC	Noted
Pilot PRV Setpoint	34.5 kPag | 5.0 psig	Noted
Pilot PSV Configuration	PSV integral to pilot PRV	Noted
Pilot PSV Setpoint	55 kPag | 8.0 psig	Noted
Pilot SSV Configuration	Single SSV	Noted
Pilot SSV Type	Electric Solenoid(s)	Noted
Pilot SSV Make (single valve)	ASCO HV427246002 24VDC (installed upright) ~ CSA 6.5-C/I ~ Class1-Zone1 ~ 50psig MOPD ~ 100psig MAWP ~ -40oC	Noted
Pilot Test Firing Valve	Neo ~ 2500-series ball valve ~ CGA 3.16 ~ -40oC	Noted
Are pressure gauge locations adequate	Yes.	Noted
Are pressure gauge ranges adequate	Yes.	Noted
Are pressure test points adequate	Yes.	Noted
Pilot Fuel Train Piping	Stainless steel tubing	Noted
Sufficient unions / flanges for maintenance	Yes.	Noted
Is Piping Adequately supported	Yes.	Noted

224 INSTALLATION - FLAMMABLE GAS VENTING

Vent Piping Materials	Carbon steel piping and stainless steel tubing	Noted
Is Sour Gas Vented	No	Noted
Are All Flammable Gas Vents Piped To Safe Location	Vent pipes are terminated in a safe location.	Noted

APPLIANCE DATA

Are Flammable Instrument Gas Vents Installed	Yes	Noted
Are PSV's Vented Separately	Yes	Noted
Are Vent Line Connection Sizes to Devices Maintained	Yes	Noted
Are Combined Vents Increased in Size	Vents are not combined.	Noted
Are There Any Vent Lines Under The Building / Enclosure	No	Noted
Are Vent Terminations Away From Building Openings and Air Intakes	Yes	Noted
Are Any Vent Line Terminations Close to Operating Personnel	No	Noted
Are Vent Terminations Equipped With Screens	No. The following terminations should have screens, Upstream overpressure protection (PSV) | Install screens on all vent terminations 1/2in and larger.	Recommend
Are Vent Line Terminations Protected From Water Entry	No. The following vents are not protected, Upstream PRV, Overpressure safety relief valve (PSV) | Vent terminations must be directed downward.	Recommend
Is Piping Adequately Supported	Yes.	Noted

261 STACK READINGS

Source of Combustion Readings	Installer	Noted
Main Burner Pressure	83 kPag | 12.0 psig	Noted
Process Temperature	52 deg C | 126 deg F	Noted
Stack Temperature	316 deg C | 601 deg F	Noted
Stack Oxygen	7.5 %	Noted
Stack CO	9 ppm	Noted
Excess Air	55.9 %	Noted
Draft Pressure	-0.010 in.WC	Noted
Efficiency (HHV)	73.3 %	Noted
Stack Temperature Notes	High. Stack temp between 350-650oF/175-340oC above bath temp. May result in lower efficiency. Recommend review of the combustion design. Adjustment of the burner and combustion air flow may be necessary.	Recommend
Excess Air Notes	O2 is in the high range of 5.5-8.0% and results in lower efficiency Recommend review of the combustion design. Adjustment of the burner and secondary air flow may be necessary.	Recommend
Carbon Monoxide Notes	Less than 50 ppm is ideal	Noted
NOx Notes	NOx not measured.	Noted
Efficiency Notes	Efficiency is acceptable in the range of 72 to 78%	Noted

FIELD INSPECTION PHOTOS 20150829_1330

Appliance

Tag Number	
LSD	02-16-68-08-W6
Serial No.	1456101

Owner

Company	Nuvista Energy Ltd
Plant	Wapiti
Area	Wapiti


Overall left view


Overall view


Overall right view



Lease sign


Appliance rating plate



Windbox name plate


Windbox - left view


Windbox - right view



Burner Management System - BMS


BMS Serial Number


BMS wiring


Overall of shell

FIELD INSPECTION PHOTOS



bath fluid label

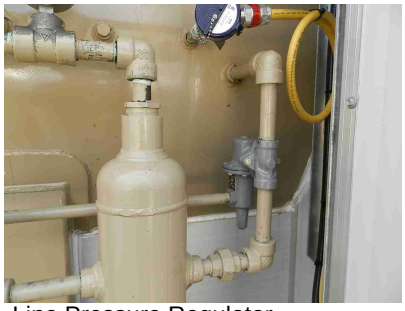
Line Pressure Regulator



Main fuel inlet pressure gauge


Upstream overpressure protection - PSV


Upstream PSV calibration tag


Overall view of fuel train


Main fuel manual shut-off valve


Main fuel Y-strainer


Main fuel train pressure regulator - PRV



Main PRV tag

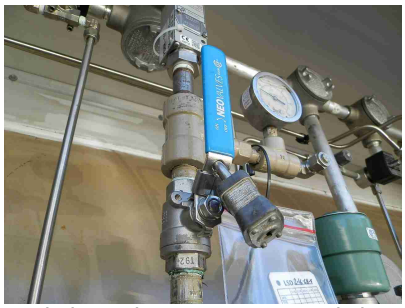
Isolation valve on pressure switch


PSLL - Low pressure shutdown

FIELD INSPECTION PHOTOS



PSLL calibration tag

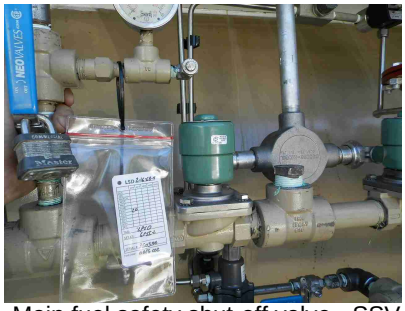
Main fuel safety shut-off valve - SSV


Main fuel safety shut-off valve - SSV


FCV - Main flow control valve


Instrument gas shut off valve



Instrument gas regulator (PRV) to FCV


Instrument gas PRV pressure gauge


Speed control valve


FCV 3-way solenoid valve


Isolation valve on pressure switch


PSHH - High pressure shutdown



PSHH calibration tag

FIELD INSPECTION PHOTOS


Main burner test firing valve


Pilot fuel train take-off


Pilot manual fuel shut-off valve


Pilot pressure regulator - PRV

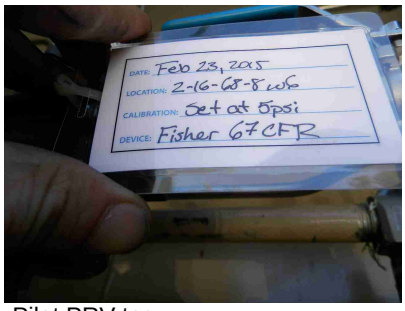

Pilot PRV tag


Pilot safety shut-off valve - SSV


Pilot burner test firing valve


Main burner and pilot close-up


Windbox - inside view


Flame cell and gasket


Peep site


Hazardous area electric seal at the windbox

FIELD INSPECTION PHOTOS


Hazardous area electric seals at the BMS


Hazardous area electric seals on components


LSLL - Low bath fluid shutdown


TSH & TSHH - dual thermocouple


Stack cleanout / access port

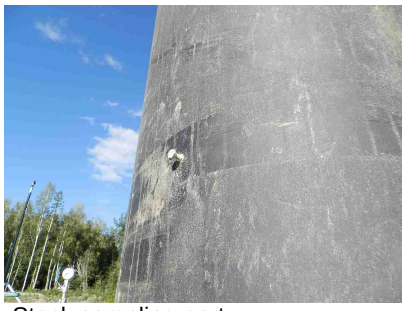
Stack sampling port


Stack with cap


Vent lines


Vent lines


Vent lines


Vent lines


Vent lines

FIELD INSPECTION PHOTOS


Vent lines


Vent lines


Vent lines


Vent line terminations


Vent line terminations


Vent line terminations


Vent line terminations



ENEFEN temporary Field Inspection Plate


ENEFEN temporary Field Inspection Plate

BILL OF MATERIALS

20150829_1330

BOM: BM1503083 Design Code Field Approval Design Code: 301A-P2-NF003

NFN Number	NFN1503083	Product Type	Design Code Field Approval		
301A-P2-NF003		Project Status	Appliance Approved		
Inspected By	Travis Todd	Owner	Nuvista Energy Ltd	LSD	02-16-68-08-W6
Inspected	07/29/2015	Plant	Wapiti	Tag	
Prepared By	Curtis Morley BSc	Area	Wapiti	Serial	1456101
Reviewed By	Rodger Talstra P.Eng.	Contact	Brent Willey	Phone	780-357-8917

Tag Number	Component Function	Connection	Description	Compliance Statement	Comments
BMS	Burner Management System				
BMS101	Burner Management System	N/A	Profire 2100 Ignition Flame Safety Controller, 10-30 VDC power input	CSA Certified C22.2-199, Class 1, Zone 2 Approved CSA 213-92	Incorporates process temperature controller, low and high fire outputs, and TS logic functions (see manual for details): TAL101 - low alarm on TSH101 - high fire output off TSHH101 - low fire output off TSHH102 - pilot output off TAHH103 - BMS off, reset
IGN306 BE306	Pilot Burner Ignitor / Flame Rod	N/A	Profire flame rod / ignitor	Accepted based on past performance	Part of the BMS supply
IGX306	Pilot Burner Ignition Transformer	N/A	Profire Ignition Transformer, 10-30 VDC	Accepted based on past performance	Part of the BMS supply. Ignition transformer to be mounted inside the windbox housing, non-hazardous classified area
CTR	Control System				
SOV205	Main Burner TCV Actuation Solenoid	1/4" FNPT	1/4" ASCO solenoid valve, Part No. EF8314G301-24VDC, 3-way, 316SS, 1.4 W coil, 150 PSIG MOPD, -40°C design	CSA 22.2 Listed, Suitable for clean dry natural gas	This valve can only be used for actuation of TCV. Use of this valve for pilot burner shutoff is prohibited.
TE102	Dual Temperature Element HI/HIHI	1/2" MNPT	Wika 1000 dual element K-type thermocouple, Class I Div 2 head	Accepted based on good engineering practice	Both elements to be wired to controller
LSLL101	Level Switch LOLO	2" MNPT	SOR Model 1510C-G2A-C-W9-ES-CS Level Switch, SPST, 1500 PSI SWP, 316SS body, 316SS float, -40°F to 400°F	CSA C22.2 Approved Class 1 Zone 1	

BILL OF MATERIALS

BOM: BM1503083 Design Code Field Approval Design Code: 301A-P2-NF003

Tag Number	Component Function	Connection	Description	Compliance Statement	Comments
CTR	Control System				
TUB621	Instrument Tubing	3/8" OD	ASTM A269 316SS seamless tube, 0.035" wall thickness	ASTM A269	
ITR	Instrument Gas Train				
HV415	TCV Instrument Gas Shutoff Valve	1/4" FNPT	NEO Cat. No. 2500, 1/4"NPT ball valve, 316SS, CGA 3.16 approved and marked	CSA Listed CGA 3.16 Compliant	
PRV415	TCV Instrument Gas Pressure Regulator	1/4" FNPT	1/4" Fisher 67CFR, 0-35 PSI spring, NBR elastomers, -29°C design	CSA non-certified, Variance applied, CRN OC2302.52	Acceptable based on past performance and manufacturers specifications.
PI415	TCV Instrument Gas Regulator Pressure Gaug	1/4" MNPT	Wika Type 233.53, 2-1/2" dial, 316SS, silicone filled, CBM connection, -40°C, 0-30 PSIG	Accepted based on past performance and manufacturer's recommendation	
SPV205	Main Burner TCV Speed Control	1/4" FNPT	SMC NAS4000-N02, speed control valve	Accepted based on past performance and manufacturer's recommendation	Speed Control to be set to approximately 15 seconds opening time of the TCV.
MBR	Burner Equipment				
BRN207	Main Burner	3/4"NPTF	2" Maxon high pressure Venturi type natural draft burner, c/w integral mixer, HD Sticktite gas nozzle, maximum fuel gas input 600,000 Btuh HHV @ 18 psig	Accepted based on past performance, testing and manufacturer	Burner fuel input shall not exceed the specified maximum flow and pressure. Gas orifice to be drilled to provide required fuel input at the maximum specified fuel pressure.
BRPL207	Main Burner Secondary Air Plate		Profire adjustable secondary air control plate	Accepted based on past performance and testing	Adjust to trim stack oxygen level at high fire to approximately 3%. Size to match burner and fire-tube
MTR	Main Fuel Train				
HV101	Main Fuel Manual Shut-off Valve	1" FNPT	NEO Cat. No. 2500, 1" NPT ball valve, 316SS, CGA 3.16 approved and marked	CSA Listed CGA 3.16 Certified	
YS101	Main Train Y-Strainer	1" FNPT	Alta YS3000-L101, 1" Y-strainer, 3000#, A350 GR. LF2, 304SS screen with 1/32" perforations, -45C to 38C, c/w plug	Accepted based on good engineering practice	

BILL OF MATERIALS

BOM: BM1503083 Design Code Field Approval Design Code: 301A-P2-NF003

Tag Number	Component Function	Connection	Description	Compliance Statement	Comments
MTR	Main Fuel Train				
TP1	Supply Pressure Test Point	1/4" NPT	1/4" NPT Plug	Accepted based on good engineering practice	
PRV103	Main Appliance Pressure Regulator	1" FNPT	1" NPT Fisher Model 627R, Part No. 627R-257, internal pressure relief valve, steel body, aluminum spring case, 1/2" Orifice, 5-20 PSI spring, "Alberta sour" trim	CSA non-certified, Variance applied. CRN 0C8768	Accepted based on past performance and manufacturers specifications, setpoint as required per burner / orifice selection and fuel pressure availability
TP2	Main Regulator Pressure Test Point	1/4" NPT	1/4" NPT Plug	B149.3 Compliant	
PSLL104	Main Burner Gas Pressure Switch Low-Low	1/2" FNPT	CCS 6900GZE12 pressure switch, 3-20psig w/ 2psi deadband, -40C	CSA C22.2 Approved Class 1 Zone 1	Switch setpoint 50% of maximum burner pressure. Note: switch isolating valve is not recommended but can be accepted if locked and tagged.
SSV202	Main Burner Upstream Safety Shutoff Valve	1"NPT	1" ASCO solenoid valve, Part No. HV285926-002, 316SS, 24VDC, 12.1 W coil, 35 PSIG MOPD, -40°F ambient design, NACE compliant	CSA Listed CSA 6.5-2005 C/I Listed CRN 0C07487.2	Valve solenoid to be mounted upright
TP3	Upstream Main SSV Pressure Test Point	1/4"NPTF	1/4" NPT Plug	Accepted based on good engineering practice	Portable test gauge / calibrator to be used on as needed basis.
SSV203	Main Burner Downstream Safety Shutoff Valve	1" NPT	1" ASCO solenoid valve, Part No. HV285926-002, 316SS, 24VDC, 12.1 W coil, 35 PSIG MOPD, -40°F ambient design, NACE compliant	CSA Listed CSA 6.5-2005 C/I Listed CRN 0C07487.2	Valve solenoid to be mounted upright
TCV205	Main Burner Input Temperature Control Valve	1" FNPT	1" Kimray 1400 SMT control valve, Part No. 302-EAI-EPSS610C, steel body, 1/2" EQ% stainless trim, 10 PSI spring Trim size must match burner rating, c/w Enefen Model STP-K1400 minimum fire stop	CSA non-certified, Variance applied	Acceptable based on performance testing and manufacturers specifications.

BILL OF MATERIALS

BOM: BM1503083 Design Code Field Approval Design Code: 301A-P2-NF003

Tag Number	Component Function	Connection	Description	Compliance Statement	Comments
MTR	Main Fuel Train				
PI206	Main Train Pressure Gauge	1/4" MNPT	Wika Type 233.53, 2-1/2" dial, 316SS, silicone filled, LM connection, -40°C, 0-30 PSIG	Accepted based on past performance and manufacturer's recommendation	
PSHH206	Main Burner Gas Pressure Switch HIHI	1/2" FNPT	CCS 6900GZE12, 3-20 psig, -40C	CSA C22.2 Approved Class 1 Zone 1	Switch setpoint 25% above maximum burner pressure. Note: switch isolating valve is not recommended but can be accepted if locked and tagged.
TP4	Main FCV Pressure Test Point	1/4"NPTF	1/4" NPT Plug	Accepted based on good engineering practice	Portable test gauge / calibrator to be used on as needed basis.
HV207	Main Burner Test Firing Valve	1" FNPT	NEO Cat. No. 2500, 1"NPT ball valve, 316SS, CGA 3.16 approved and marked	CSA Listed CGA 3.16 Certified	Mount as close as possible to the burner (on the burner windbox)
PI207	Main Burner Pressure Gauge	1/4" MNPT	Wika Type 233.53, 2-1/2" dial, 316SS, silicone filled, CBM connection, -40°C, 0-30 PSIG	Accepted based on past performance and manufacturer's recommendation	Mount as close as possible to the burner (on the burner windbox)
TP5	Main Burner Pressure Test Point	1/4"NPTF	1/4" NPT Plug	Accepted based on good engineering practice	Portable test gauge / calibrator to be used on as needed basis.
PIP601	Small Ø Low Temperature Piping	<=1.5"	Sweet Service, ASTM A333 Gr.6 seamless, sched 80, ANSI 150# rating @ -46°C, no short nipples	ASTM A333 Grade 6 SMLS	
FTG610	Low Temperature 3000# Fittings	all	ASTM A350 Grade LF2, 3000#, ANSI 150# rating @ -46°C	ASTM A350 Grade LF2	
TUB622	Main/Pilot Tubing	see comments	ASTM A269 316SS seamless tube, 0.049" wall thickness	ASTM A269	May be used for the main or pilot fuel train. Size according to maximum flow, minimum 3/8" for pilot and 1/2" for main.
PBR	Pilot Burner				
BRNP306	Pilot Burner	1/4"NPT	1/2" Profire Burner Pilot Nozzle, c/w straight pipe nipple, RHSB burner nozzle	Accepted based on past performance and testing	

BILL OF MATERIALS

BOM: BM1503083 Design Code Field Approval Design Code: 301A-P2-NF003

Tag Number	Component Function	Connection	Description	Compliance Statement	Comments
PTR	Pilot Fuel Train				
HV301	Pilot Fuel Manual Shut-off Valve	1/4" FNPT	NEO Cat. No. 2500, 1/4"NPT ball valve, 316SS, CGA 3.16 approved and marked	CSA Listed CGA 3.16 Certified	
PRV302	Pilot Pressure Regulator	1/4" FNPT	1/4" Fisher 67CFR regulator with internal relief, tapped bonnet, 0-35 PSI spring, "Alberta sour", NBR elastomers, -29°C design	CSA non-certified, Variance applied, Acceptable based on past performance	Setpoint 3 to 5 PSIG typical, must match pilot orifice drilling for approximately 30,000 BTU/hr pilot
PI302	Pilot Regulator Pressure Gauge	1/4" MNPT	Wika Type 233.53, 2-1/2" dial, 316SS, silicone filled, CBM connection, -40°C, 0-15 PSIG	Accepted based on past performance and manufacturer's recommendations	
TP6	Pilot Regulator Pressure Test Point	1/4"NPTF	1/4" NPT Plug	B149.3 Compliant	Portable test gauge / calibrator to be used on as needed basis.
SSV304	Pilot Safety Shutoff Valve	1/4" NPTF	1/4" ASCO solenoid valve, Part No. HV427246-002, 316SS, peak and hold 10.6W peak/0.85W holding power, 24VDC, 4 H coil, 50 PSIG MOPD, -40°F design, NACE compliant	CSA Listed CSA 6.5-2005 C/I Listed CRN 0C07487.2	Valve solenoid to be mounted upright
TP7	Pilot SSV Pressure Test Point	1/4"NPTF	1/4" NPT Plug	B149.3 Compliant	Portable test gauge / calibrator to be used on as needed basis.
HV306	Pilot Test Firing Valve	1/4" FNPT	NEO Cat. No. 2500, 1/4"NPT ball valve, 316SS, CGA 3.16 approved and marked	CSA Listed CGA 3.16 Certified	Mount as close as possible to the pilot (on the burner windbox)
PIP601	Small Ø Low Temperature Piping	<=1.5"	Sweet Service, ASTM A333 Gr.6 seamless, sched 80, ANSI 150# rating @ -46°C, no short nipples	ASTM A333 Grade 6 SMLS	
FTG610	Low Temperature 3000# Fittings	all	ASTM A350 Grade LF2, 3000#, ANSI 150# rating @ -46°C	ASTM A350 Grade LF2	
TUB622	Main/Pilot Tubing	see comments	ASTM A269 316SS seamless tube, 0.049" wall thickness	ASTM A269	May be used for the main or pilot fuel train. Size according to maximum flow, minimum 3/8" for pilot and 1/2" for main.

RATING PLATE

20150829_1330

NFN Number	NFN1503083	Product Type	Design Code Field Approval		
Design Code	301A-P2-NF003	Project Status	Appliance Approved		
Inspected By	Travis Todd	Owner	Nuvista Energy Ltd	LSD	02-16-68-08-W6
Inspected	07/29/2015	Plant	Wapiti	Tag	
Prepared By	Curtis Morley BSc	Area	Wapiti	Serial	1456101
Reviewed By	Rodger Talstra P.Eng.	Contact	Brent Willey	Phone	780-357-8917

GAS FIRED APPLIANCE RATING PLATE

Coyote North Ltd.
110-8715 109th Street, Grande Prairie, AB, T8V 8H7

Appliance Manufacturer	Enlyn Corporation
Location Built In	Red Deer AB
Built Date	2015
Appliance Serial Number	1456101
New Install or Upgrade	New Install
Installation Company	Coyote North Ltd.
Appliance Type	Line Heater
Location LSD	02-16-68-08-W6
Elevation Above Sea Level	2612 ft | 796 m
Ambient Temperature Min	-29 deg C | -20 deg F
Ambient Temperature Max	40 deg C | 104 deg F
Main Fuel Type	Sales Spec Natural Gas
Main Fuel Quality	Sweet Dry
Main Fuel Inlet Pressure	531 kPag | 77.0 psig
Secondary Fuel Type	Not approved for secondary fuel use
Pilot Fuel Type	Sales Spec Natural Gas
Pilot Fuel Quality	Sweet Dry
Pilot Fuel Inlet Pressure	82.7 kPag | 12.0 psig
Appliance Max Fuel Input (HHV)	2.04 GJ/h | 1.94 MM Btuh
Number of Burners per Appliance	1
Maximum Burner Pressure	82.7 kPag | 12.0 psig
Minimum Burner Pressure	6.9 kPag | 1.0 psig
Pilot Pressure	34.5 kPag | 5.0 psig
Instrument Gas Type	Sales Spec Natural Gas
Instrument Gas Pressure Min	69 kPag | 10.0 psig
Electrical Area Class At Burner	Unclassified
Electrical Area Class At Fuel Train	Class 1 Zone 1
Electrical Area Class At Control Panel	Class 1 Zone 2
Primary Control Power	24 VDC | 5.0 amps

GAS FIRED APPLIANCE FIELD APPROVAL
ENEFEN ENERGY EFFICIENCY ENGINEERING LTD.
Field Approval Number: NFN1503083
Approval Date: 28 Aug 2015
Approved By: Jozef Jachniak, P. Eng.

ENEFEN is accredited by the Standards Council of Canada as an Inspection Body for gas-fired appliances and equipment. Gas and electrical safety evaluation based on Canadian codes requirements outlined in CAN-P-1608 Appendix C. This approval represents the results of a single field inspection and is not a product certification. This approval is void if this appliance is altered or relocated.
ENEFEN est accrédité par le Conseil Canadien des Normes en tant qu'Organisme d'Inspection pour les appareils et équipement à gaz. L'évaluation de la sécurité du gaz et électrique est basée sur les exigences des codes canadiens énoncés à l'annexe C du CAN-P-1608. Cette approbation représente les résultats d'une seule inspection sur le terrain et ne constitue pas une certification du produit. Cette approbation est nulle si cet appareil est modifié ou déplacé.

ENEFEN Energy Efficiency Engineering Ltd.
Suite 705, 101-5101 50th Ave. • Leduc, AB T9E 0B9 • +1-780-665-2863 • Fax: +1-866-583-0520
www.ENEFEN.com

FUEL COMPOSITION REPORT 20150829_1330

Prepared By Curtis Morley BSc
Reviewed By Rodger Talstra P.Eng.

Client / Consultant Coyote North Ltd.
Contact Brent Willey
Email brent.willey@coyotenorth.ca
Tel 780-357-8917
Cell 780-831-6822
Fax
Owner / Operator Nuvista Energy Ltd

Plant Wapiti
Area Wapiti
Elevation 2612 ft | 796 m
Jurisdiction AB
Process Wellsite
Function Indirect Fired Gas Heating
Appliance Line Heater
Appliance Tag
LSD 02-16-68-08-W6
Serial Number 1456101

Fuel Usage	Pilot Fuel	Main Fuel
Fuel Type	Sales Spec Natural Gas	Sales Spec Natural Gas
Fuel Info Source	Commercial Fuel	Commercial Fuel
Fuel Temperature C/F	15.6 / 60.1	15.6 / 60.1
C1 Methane	0.9300	0.9300
C2 Ethane	0.0600	0.0600
C3 Propane	0.0020	0.0020
C4 Butane	0.0000	0.0000
C5 Pentane	0.0000	0.0000
C6 Hexane	0.0000	0.0000
C7 heptane	0.0000	0.0000
C8 as Octane	0.0000	0.0000
C6H6 Benzene	0.0000	0.0000
H2S Hydrogen Sulfide	0.0000	0.0000
CO Carbon Monoxide	0.0000	0.0000
H2 Hydrogen	0.0000	0.0000
S Sulfur Vapor	0.0000	0.0000
COS Carbonyl Sulfate	0.0000	0.0000
CS2 Carbon Disulfide	0.0000	0.0000
CH32S2 Dimethyl Disulfide	0.0000	0.0000
CH3SH Mercaptan	0.0000	0.0000
O2 Oxygen	0.0000	0.0000
N2 Nitrogen & Inert	0.0050	0.0050
CO2 Carbon Dioxide	0.0030	0.0030
SO2 Sulfur Dioxide	0.0000	0.0000
H2O Water Vapor	0.0000	0.0000
Molecular Weight MW	17.0834	17.0834
Fuel Density lb/ft3 | kg/m3	0.045 | 0.7245	0.045 | 0.7245
Specific Volume ft3/lb | m3/kg	22.109 | 1.3803	22.109 | 1.3803
Specific Gravity	0.5910	0.5910
Specific Heat Btu/lb/degF | kJ/kg/degC	0.5081 | 2.1274	0.5081 | 2.1274
Sulfur Content By Weight	0.0000	0.0000
HHV English Btu/scf | Btu/lb	**1052.9 | 23316**	**1052.9 | 23316**
HHV Metric MJ/m3 | MJ/kg	**39.23 | 54.23**	**39.23 | 54.23**
LHV English Btu/scf | Btu/lb	949.6 | 21028	949.6 | 21028
LHV Metric MJ/m3 | MJ/kg	35.38 | 48.91	35.38 | 48.91
Combustion O2 ft3/ft3	2.0800	2.0800
H2O in POC ft3/ft3	2.0480	2.0480
CO2 in POC ft3/ft3	1.0590	1.0590
N2 in POC ft3/ft3	7.8772	7.8772
SO2 in POC ft3/ft3	0.0000	0.0000

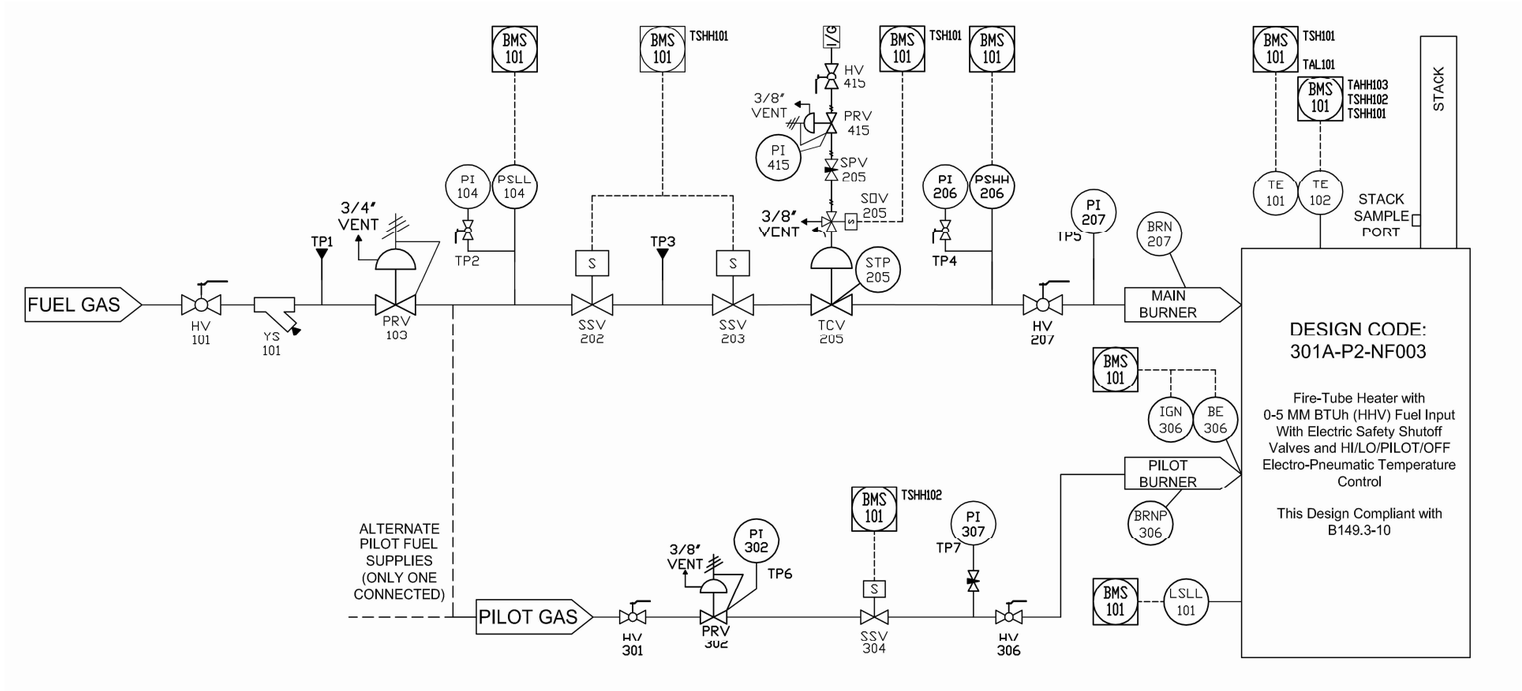

VENTING

1.1 Vent sweet fuel gas separately to a safe location outdoors, using vent line equal in size to the vent outlet connection of the respective device for the first 15 meters, then increase by one pipe size for every additional 15 meters in length.
1.2 When venting multiple devices to a common header the cross section of the header shall be equal or larger than a total of cross sections of all devices being vented through that header multiplied by 2.
1.3 The discharge of the vent line (vent header) shall be located not less than 3ft (1m) horizontally from any building opening that is below the level of such discharge, not beneath any building, and not less than 10ft (3m) in any direction from air openings into a direct vent appliance, a mechanical air intake, or a source of ignition.
1.4 An outdoor vent line termination or device vent outlet shall be equipped with a means to prevent the entry of water, insects or foreign material. When venting sour fuel gas, appropriate project / plant specific measures shall be taken under consideration to ensure safety.

PIPING

2.1 All fuel gas supply piping upstream and including the main manual shutoff valve HV101 shall be compliant with ASME B31.3. All piping and equipment downstream of the main manual shutoff valve HV101 shall be compliant with CSA B149.3.
2.2 All piping, fittings and instrument tubing materials shall be as specified in the Bill of Materials for this project.
2.3 Piping upstream of PRV103 to be hydro tested to 375 psig per ABSA approved procedure. Piping downstream of PRV103 to be pneumatically soap tested with compressed air to 45 psig according to ENEFEN pneumatic test procedure.

UNIONS & FLANGES

3.1 Sufficient unions / flange connections shall be provided by the installer to allow tightening or disassembly of individual fuel train components and of the main and pilot burner without affecting other components. Locations are not shown on this drawing and are subject to the physical layout of fuel train, windbox, and the burner.

VALVES

4.1 Manual ball valves shall be installed with handle in open position pointing in the direction of flow.
4.2 HV207 and PI207 shall be mounted on burner windbox.

PRV DESIGN

5.1 A single regulator with internal relief design is used in lieu of a dual PSV to protect downstream components from overpressure.

SWITCHES

6.1 PSLL and PSHH shall be mounted as close as practicable above fuel train so that they are easily accessible for calibration, are self-draining, and possibility of freezing is minimized.
6.2 Quarter-turn isolating ball valve shall be in L.O. (locked open) position. Instrument tubing union shall be installed between the valve and the switch, and switch wired using flex cable to allow partial removal for calibration.
6.3 LSLL shall be mounted so that the fire tube is totally immersed, with a minimum of 2 inches of liquid above its top tangent.

DESIGN SPECIFICATIONS

Owner Name	Nuvista Energy Ltd
Owner Project Number	--
Client Name	Coyote North Ltd.
Plant / Branch	Wapiti
Area / Department	Wapiti
Location LSD	02-16-68-08-W6
Appliance Function	Indirect Fired Gas Heating
Appliance Tag Number	--
Appliance Manufacturer	Enlyn Corporation
Location Built In	Red Deer AB
Built Date	2015
Appliance Type	Line Heater
Elevation Above Sea Level	2612 ft | 796 m
Combustion Air Source	Natural Draft
Appliance Max Fuel Input (HHV)	2.04 GJ/h | 1.94 MM Btuh
Main Fuel Type	Sales Spec Natural Gas
Main Fuel Inlet Pressure	531 kPag | 77.0 psig
Pilot Fuel Type	Sales Spec Natural Gas
Pilot Fuel Inlet Pressure	82.7 kPag | 12.0 psig
Instrument Actuation Medium	Pneumatic / Electric
Instrument Gas Pressure Min	69 kPag | 10.0 psig
Ambient Temperature Max	40 deg C | 104 deg F
Ambient Temperature Min	-29 deg C | -20 deg F
Fuel Input Per Burner (HHV)	2.041 GJ/h | 1.935 MM Btuh
Number of Burners per Appliance	1
Maximum Burner Pressure	82.7 kPag | 12.0 psig
Minimum Burner Pressure	6.9 kPag | 1.0 psig
Pilot Burner Type	Intermittent / Continuous
Pilot Burner Fuel Input (HHV)	0.03 GJ/h | 0.03 MM Btuh
Pilot Pressure	34.5 kPag | 5.0 psig
Main Power	|
Electrical Area Class At Burner	Unclassified
Electrical Area Class At Fuel Train	Class 1 Zone 1
Electrical Area Class At Control Panel	Class 1 Zone 2
Burner Management System	Prepackaged / CSA 22.2 Certified.
Type of Flame Safeguard Control	Single Burner FSG
Bill Of Materials (BOM)	BM1503083 Rev 0
Primary Control Power	24 VDC | 5.0 amps
Secondary Control Power	|

PROJECT NOTES

This document is subject to a Design Approval in Principle. The completed and working appliance is subject to a compulsory Field Inspection. Both steps must be dated and signed and sealed by a qualified professional engineer in fields provided.
INSTALLATION MAY REQUIRE LOCAL PERMITS
No part substitution allowed without written authorization from ENEFEN. In addition, the design and the installation of the appliance may be subject to other local gas safety regulations, permits, and Field Approvals. Field Approval and all permits are void if this appliance is altered or relocated.

REVISION	REVISION DESCRIPTION	DATE

INSPECTION BODY REQUIREMENTS
USED AS BASIS FOR EVALUATION

ISO/IEC 17020:2012
Standards Council of Canada CAN-P-1608 Appendix C: Commercial and Industrial Gas-Fired Appliances and Equipment
Any or all of the current versions of the following:
- CAN/CSA-B149.1 Natural gas and propane installation code
- CAN/CSA-B149.2 Propane storage and handling code
- CAN/CSA-B149.3 Code For The Field Approval Of Fuel-Related Components On Appliances and Equipment
- CSA STD C22.1 Canadian Electrical Code, Part I Safety Standard for Electrical Installations
- CAN/BNQ 1784-000 Canadian Hydrogen Installation Code
- CSA B51 Boiler, pressure vessel and pressure piping code
- Variances or provincial deviations (such as VAR-GAS-05-05{rev 2} Gas Safety Variance on the application of CAN/CSA-B149-3.05, Alberta Municipal Affairs, Safety Codes Council) as may be issued from time to time by the Provincial or Territorial Regulatory Authority
- Relevant requirements of the National Building Code of Canada and the National Fire Code of Canada

GAS APPLIANCE DESIGN APPROVED IN PRINCIPLE
SUBJECT TO FIELD INSPECTION

APPROVED BY:
Rodger Talstra, P. Eng.
APPROVED DATE:
28 Aug 2015
PERMIT TO PRACTICE
P08977

GAS APPLIANCE FIELD INSPECTION PASSED
FIELD APPROVAL COMPLETE

APPROVED BY:
Jozef Jachniak, P. Eng.
APPROVED DATE:
28 Aug 2015
PERMIT TO PRACTICE
P08977

UNDER THE AUTHORITY OF THE ALBERTA SAFETY CODES ACT, CHAPTER S-1 SECTION 38(1) AND ALBERTA MUNICIPAL AFFAIRS FILE: 16570-G01 PROVINCE WIDE VARIANCE VAR-GAS-01-13 (July 1, 2013): ENGINEERED DESIGNS FOR SITE SPECIFIC GAS-FIRED PROCESS EQUIPMENT.

ENEFEN ENGINEERING LTD.

Copyright © 2015
Drawing: NFN1503083-100
Design By: ENEFEN Engineering Ltd.
Drawn By: ENEFEN Engineering Ltd.
Approvals By:

Nuvista Energy Ltd
Wapiti - Wapiti
02-16-68-08-W6

PIPING & INSTRUMENTATION DIAGRAM (P&ID)

Line Heater

2.04 GJ/h | 1.94 MM Btuh

SIZE: B	NFN1503083-100	REV: 0
SCALE: None	08/29/2015	SHEET 1 OF 1

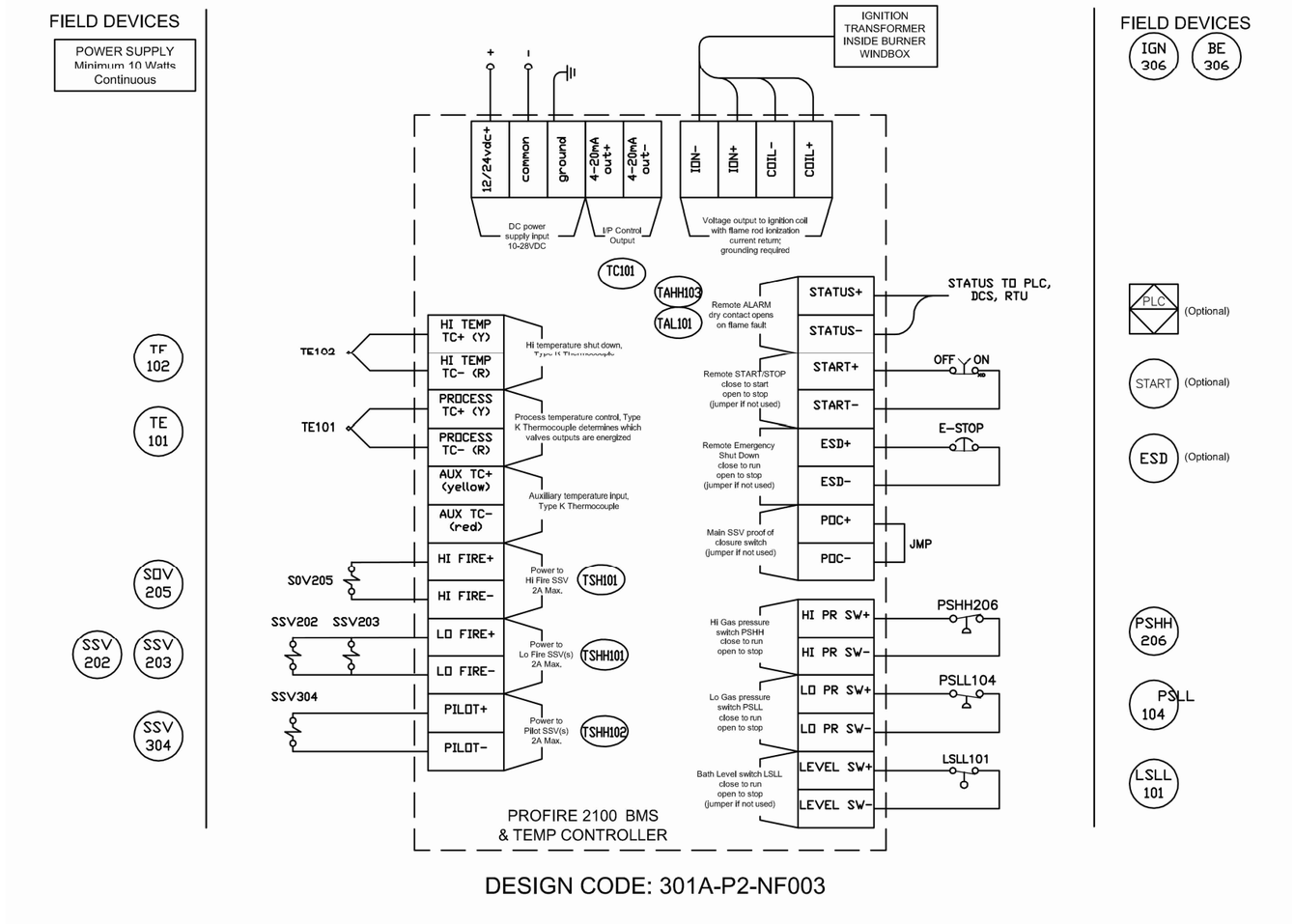

DESIGN CODE: 301A-P2-NF003

NOTES

1. All electrical work shall be performed by qualified personnel.
2. All electrical materials and methods shall be appropriate for the specified environment and Electrical Classification Areas and in compliance with the CSA22.1 Canadian Electric Code. Wiring shall be 14Ga minimum, except for thermocouple wiring which may be 16Ga.
3. Electrical seals and wiring methods shall be installed as required by the CSA 22.1-12 Canadian Electrical Code.
4. PSLL and PSHH shall be mounted as close as practicable above fuel train so that they are easily accessible for calibration, are self-draining, and possibility of freezing is minimized. Quarter-turn isolating ball valve shall be in L.O. (locked open) position.
5. Instrument tubing union shall be installed between the valve and the switch, and switch wired using flex cable to allow partial removal for calibration.
6. Zener barriers can be used to install safety shut-off valves with a Class 1 Div 2 rating in a Class 1 Zone 1 area.

DESIGN SPECIFICATIONS

Owner Name	Nuvista Energy Ltd
Owner Project Number	--
Client Name	Coyote North Ltd.
Plant / Branch	Wapiti
Area / Department	Wapiti
Location LSD	02-16-68-08-W6
Appliance Function	Indirect Fired Gas Heating
Appliance Tag Number	--
Main Power	|
Electrical Area Class At Fuel Train	Class 1 Zone 1
Electrical Area Class At Control Panel	Class 1 Zone 2
Electrical Area Class At Burner	Unclassified
Burner Management System	Prepackaged / CSA 22.2 Certified.
Type of Flame Safeguard Control	Single Burner FSG
Bill Of Materials (BOM)	BM1503083 Rev 0
Primary Control Power	24 VDC | 5.0 amps
Secondary Control Power	|

PROJECT NOTES

This document is subject to a Design Approval in Principle. The completed and working appliance is subject to a compulsory Field Inspection. Both steps must be dated and signed and sealed by a qualified professional engineer in fields provided.
INSTALLATION MAY REQUIRE LOCAL PERMITS
No part substitution allowed without written authorization from ENEFEN. In addition, the design and the installation of the appliance may be subject to other local gas safety regulations, permits, and Field Approvals. Field Approval and all permits are void if this appliance is altered or relocated.

REVISION	REVISION DESCRIPTION	DATE

INSPECTION BODY REQUIREMENTS USED AS BASIS FOR EVALUATION	GAS APPLIANCE DESIGN APPROVED IN PRINCIPLE SUBJECT TO FIELD INSPECTION	GAS APPLIANCE FIELD INSPECTION PASSED FIELD APPROVAL COMPLETE
ISO/IEC 17020:2012 Standards Council of Canada CAN-P-1608 Appendix C: Commercial and Industrial Gas-Fired Appliances and Equipment Any or all of the current versions of the following: - CAN/CSA-B149.1 Natural gas and propane installation code - CAN/CSA-B149.2 Propane storage and handling code - CAN/CSA-B149.3 Code For The Field Approval Of Fuel-Related Components On Appliances and Equipment - CSA STD C22.1 Canadian Electrical Code, Part I Safety Standard for Electrical Installations - CAN/BNQ 1784-000 Canadian Hydrogen Installation Code - CSA B51 Boiler, pressure vessel and pressure piping code - Variances or provincial deviations (such as VAR-GAS-05-05{rev 2} Gas Safety Variance on the application of CAN/CSA-B149-3.05, Alberta Municipal Affairs, Safety Codes Council) as may be issued from time to time by the Provincial or Territorial Regulatory Authority - Relevant requirements of the National Building Code of Canada and the National Fire Code of Canada	APPROVED BY: Rodger Talstra, P. Eng. APPROVED DATE: 28 Aug 2015 PERMIT TO PRACTICE P08977 **UNDER THE AUTHORITY OF THE ALBERTA SAFETY CODES ACT, CHAPTER S-1 SECTION 38(1) AND ALBERTA MUNICIPAL AFFAIRS FILE: 16570-G01 PROVINCE WIDE VARIANCE VAR-GAS-01-13 (July 1, 2013): ENGINEERED DESIGNS FOR SITE SPECIFIC GAS-FIRED PROCESS EQUIPMENT.**	APPROVED BY: Jozef Jachniak, P. Eng. APPROVED DATE: 28 Aug 2015 PERMIT TO PRACTICE P08977

ENEFEN ENGINEERING LTD.

Copyright © 2015
Drawing: NFN1503083-200
Design By: ENEFEN Engineering Ltd.
Drawn By: ENEFEN Engineering Ltd.
Approvals By:

Nuvista Energy Ltd
Wapiti - Wapiti
02-16-68-08-W6

SYSTEM WIRING DIAGRAM

Line Heater

2.04 GJ/h | 1.94 MM Btuh

SIZE: B	NFN1503083-200	REV: 0
SCALE: None	08/29/2015	SHEET 1 OF 1