ENLYN
PROCESS SYSTEMS

1-844-GO ENLYN
Visit us at www.enlyn.com

- Vessel Repairs & Modifications
- Maintenance & Repairs
- Piping Modifications & Repairs
- Tower Inspections & Re-traying
- Compressor Retrofits and Overhauls
- Turnaround Planning
- Plant Mothballing
- Operator Training
- Plant Troubleshooting
- Extensive Parts Inventory
- CSA B149.3 Burn Parts & Services
- Direct Fired Heater Coil and Burner Repair
- Direct Fired Heater Re-rating
- Plant Optimization Studies

AVAILABLE 24 HRS

QUALITY PRODUCTS AND SERVICES

ENLYN
PROCESS SYSTEMS

CAUTION CAUTION CAUTION

OIL AND GAS PROCESSING UNITS ARE DANGEROUS PIECES OF EQUIPMENT. ENSURE THAT YOU ARE FULLY TRAINED AND FAMILIAR WITH THEIR OPERATION.

ENSURE YOU FAMILIARIZE YOURSELF WITH THIS EQUIPMENT BEFORE STARTING IT

POTENTIAL HAZARDS

1. Explosion hazard
2. Hydrocarbons
3. Sour Gas (H_2S)
4. Oxygen Deficient Atmosphere
5. Noise Hazard
6. Rotating Machinery

Make sure the unit is sufficiently purged of any explosive mixture and there are no gas leaks before starting. Unit startup/shutdown procedure to be carried out by trained, authorized personnel only.

CAUTION CAUTION CAUTION

Operational inquiriies can be directed to Enlyn Process Systems.
For replacement parts/maintenance assistance contact Enlyn.

1-844-GO ENLYN | www.enlyn.com

ENLYN
PROCESS SYSTEMS

NuVista Energy Ltd.

RE: 2mm BTU Lineheater 3" 1500 RTJ x 3" 1500 RTJ Sour (E-159)

QUOTE # 14-561-01
DATED: January 12, 2014

ENLYN CORP.
Po Box 726 Red Deer, AB, Canada
Phone: 1-403-885-9262 Fax: 1-403-885-9265

ENLYN

Indirect Fired Line Heater Turn-Over Package Index

1. Scope of supply
    a. Quote
    b. Contract Review
    c. Purchase Order
    d. Photos of Completed Unit

2. Drawings
    a. Process and Instrument Diagram
    b. General Arrangement

3. Coil
    a. Indirect Fired Heater Coil Travel Sheet
    b. AB-28 (Manufacture's Data Report for Indirect Fired Heater Coils)
    c. CRN Acceptance
    d. Registered CRN Drawing
    e. Weld Mapped Coil Drawings

4. Piping
    a. Piping Travel Sheet – Fuel Gas System
    b. AB-83 (Construction Data Report for Piping Systems)
    c. Weld Mapped Piping Drawings
    d. Weld Procedures
    e. Welders Qualifications and Certifications
    f.

5. NDE and Hydro Testing
    a. NDE Instruction Sheet
    b. NDE Report
    c. Examiner Qualifications
    d. Pressure Test Examination and Inspection Sheets
    e. Hydro Test Report
    f. Gauge Calibration Certificates

6. Stress Relieving
    a. Instruction Sheet
    b. Chart
    c. Thermometer Calibration

7. Instrumentation
    a. PSV Certification
    b. Fuel Gas Scrubber
    c. Burner Nozzle and Flame Arrestor Housing
    d. Combustion Safety Controller
    e. Level controllers, Switches and Gauges
    f. Pressure controllers, Switches and Transmitters

8. Mill Test Reports

ENLYN
PROCESS SYSTEMS

QT-14-561-R0

November 27, 2014

Enlyn Quotation

For

THREE 2 MMBtu/hr Sour Service Line Heater

Submitted To: NuVista Energy Ltd.
c/o Aztec Engineering Inc.

Attn: Jon Grant

ENLYN CORP.
5509 Broadway Avenue, Blackfalds, AB, Canada
Phone: 1-403-885-9262 Fax: 1-403-885-9265

THREE 2 MMBtu/hr Sour Service Line Heater

Thank you for the opportunity to provide you with this quotation for your Line Heater Package requirements. Please keep Enlyn Process Systems in mind for all your future process and production needs.

1 Vessels

S-100 LINE HEATER SHELL

Size:	78" OD x 24'
Orientation:	Horizontal
Design Pressure:	Atmosphere
Design Temp:	N/A
M.D.M.T.:	N/A
Corrosion Allowance:	N/A
Built By:	Various
Serial #:	TBD
Shell Condition:	New Surplus

FGPH-100 FUEL GAS PREHEAT COIL

1 - Preheat Fuel Gas Line - 1" Sch 80, A-106B pipe, 3000# A-105N fittings
Socketwelded construction, hydrotested to 435 psi

PHC-100 PREHEAT COIL

Built By:	Enlyn Process Systems
Serial #:	N/A
CRN #:	TBD
A#	TBD

1 - 3" sch 160, SA-106 GrB, 8-pass coil with ANSI 1500 RTJ flanged connections
3125 psi @ -20 to 200 ºF, 100% RT, PWHT, 1/8" C.A.

RHC-100 REHEAT COIL

Built By:	Enlyn Process Systems
Serial #:	N/A
CRN #:	TBD
A#	TBD

1 - 3" sch 160, SA-106 GrB, 8-pass coil with ANSI 1500 RTJ flanged connections
3125 psi @ -20 to 200 ºF, 100% RT, PWHT, 1/8" C.A.

FT-100 FIRETUBE

1 - 24" OD sch 20 Fire Tube, 48' overall effective length, mitred return removable firetube & 20' exhaust stack, fire tube flux rate 10,000 BTU/hrft^2

V-300 FUEL GAS SCRUBBER

Size:	6" ID x 36" S/S
Design:	Vertical 2 phase
Design Pressure:	150 psig
Design Temperature:	100 degrees F
M.D.M.T.	-20 degrees F
Corrosion Allowance:	NIL
Built By:	Lo-tech
Serial #	TBA
Vessel Condition:	New

Vessel Includes internal HLSD for fuel gas supply.
Designed and fabricated as per ASME code, Section VIII, Division 1 and the Alberta Government regulations. Registered in all Canadian jurisdictions

2 Tagged Items

See attached document - **SCHEDULE A - TAGGED ITEMS (Rev 0)**

3 Burner Management System

ProFire PF-2100 combustion safety controller
CSA B149.3 compliant fuel gas valve train

4 Structural Steel Skid

8' x 37'
8" WF primary skid members
oilfield roll ends
blasted, primed and painted as per Enlyn Standard coating system

5 Metal Building

5' x 2' x 5' tall shed style foam panel building (enclosure over controls)
28 ga ASTM A792 Gr.33 steel, 1.5" thk polyurethane foam injected panel construction
galvalume interior/exterior
one door c/w latch

6. Insulation

1.5" thick Mineral Wool insulation
.020 stucco embossed aluminum cladding
heater shell insulated and cladded, excluding end plates

7 Material Specifications

Structural Steel

Wide Flange	CSA G40.21 300W
All Other Sections	CSA G40.21 300W

Coils

Pipe	SA-106 GrB SMLS
Flanges	SA-105N
Fittings	SA-234 WPB
Gaskets	Style R ring gaskets 316 SS Spiral Wound
Bolting	SA-193-B7M, SA-194-2HM

Threaded Piping

Pipe	SA-106 GrB SMLS
Threaded Fittings	A-105N, 3000#

Tubing

Tubing, < ½" NPS	0.035" W.T., 304 SS
Tubing, ½" NPS	0.049" W.T., 304 SS
Tubing Fittings	304 SS Swagelok

Valves

NEO 2000 NPT Ball valves CSA fire rated
1/4" Needle valves, STD service

8 Testing / Inspection

Hydrotesting

Pressure Piping & Coils	As per ASME B31.3
Line Heater FG Coil	As per ASME B31.3
Threaded Piping	As per ASME B31.3
Instrument Tubing	will be air/soap tested to normal operating pressure

Pneumatic Testing

Line Heater Shell	leak test (2 psi)

Radiography

Heater Coil	100% BW
Firetube	none included

PWHT

Heater Coils	1150 °F for 60 min

Ultrasonic Testing

Heater Coil & Firetube	included

Hardness Testing

none included

Magnetic Particle Inspection

Heater Coil & Firetube	All fillets on pressure piping and grooves/fillets on structural

9 Painting & Coating

External Surface Prep	SSPC-SP3 Mechanical Clean
Shell External Finish Paint	One coat of Cloverdale Industrial DTM (Grey) Partial coat of Cloverdale Industrial DTM (Tan QC-315)
Piping / Skid Finish Paint	One coat of Cloverdale Industrial DTM (Grey) One coat of Cloverdale Industrial DTM (Tan QC-315)
Stack	High Heat Black
Shell Internal Coating	None

10 Packaging

All shipped-loose instruments to be packaged in a crate
Shipping brackets will be installed on piping, where required

* Any additional shipping requirements will be invoiced at cost plus 15%

11 Quality Control

1 hard copy of Manual sent with package
- Operations manual
- P&ID
- General Arrangement drawing
- Structural Drawing
- Vessel QC including MTRs
- Piping QC including MTRs

1 electronic copy of turnover
- Operations manual
- P&ID
- General Arrangement drawing
- Structural Drawing
- Vessel QC including MTRs
- Piping QC including MTRs

12 Commercial Terms

INVOICE TERMS	40% deposit on order 30% on approved drawings 30% balance on completion
BASE PRICE, NEW	$ 148,858.96
GST:	Not included in quoted PRICE
AVAILABILITY:	Half completed stock
DELIVERY:	2 - 3 weeks for first unit ARAD. One per week there after
DELIVERY POINT:	EXW Enlyn's Blackfalds Facility
LOADING:	Not Included - Loading Extra if required
WARRANTY:	12 Months
QUOTE VALIDITY:	10 Days

See attached STANDARD TERMS AND CONDITIONS OF SALE and EQUIPMENT WARRANTY.

Please call us if you require any additional information, or to proceed with an order.

Yours Truly,

Mark Rajher
Business Development

TAG	INSTRUMENT TYPE	MAKE	DESCRIPTION
BMS-100	Burner Control	ProFire	PF-2100 Burner Management System
PCV-100	Pressure Regulator	Fisher	1" NPT Fisher 630, 46-95 psi, 1/8" port
PCV-101	Pressure Regulator	Fisher	Fisher 67CFR, 1/4" NPT, 0-30 psi spring range, c/w Winters 0-60 psi pressure gauge, 2.5" face, 1/4" CBM connection
PCV-102	Pressure Regulator	Fisher	Fisher 67CFR, 1/4" NPT, 0-30 psi spring range, c/w Winters 0-60 psi pressure gauge, 2.5" face, 1/4" CBM connection
PCV-103	Pressure Regulator	Fisher	Fisher 67CFR, 1/4" NPT, 0-30 psi spring range, c/w ProFires 0-15 psi pressure gauge, 2.5" face, 1/4" CBM connection
PCV-300	Pressure Regulator	Fisher	1" NPT Fisher 627R, 5-20 psi, 1/2" orifice
PSLL-100	Pressure Switch	CCS	Pressure Switch, Model# 6900GZE12, 3-20 psi
PSHH-100	Pressure Switch	CCS	Pressure Switch, Model# 6900GZE12, 3-20 psi
SSV-100	Solenoid	Asco	1" FNPT Asco solenoid, HV298568002, 316SS
SOV-100	Solenoid (Pilot)	Asco	1/4" NPTF, Asco 3-way Solenoid, EF8314G301
SSV-102	Solenoid	Asco	1" FNPT Asco solenoid, HV298568002, 316SS
SOV-105	Solenoid	Asco	1/4" NPTF, Asco Solenoid, HV427246002
TV-100	Temperature Control Valve	Kimray	1" Kimray 1400 SMT PO
PI-100	Pressure Gauge	Winters	1/2" MNPT, 0-200 psi
PI-101	Pressure Gauge	Wika	1/4" MNPT, 0-30 psi
PI-102	Pressure Gauge	Wika	1/4" MNPT, 0-30 psi
PI-300	Pressure Gauge	Wika	1/2" MNPT, 0-300 psi, 3" dial, liquid filled
TI-101	Temperature Gauge	Trend	-20 - 120 deg C, Dual Scale, 3" dial c/w 6" thermowell, 1" NPT process connection
TE-101	Temperature Element	Wika	TC-10 dual-head Type K thermocouple, 1/2" MNPT
TSHH-100	Temperature Switch High High	ProFire	built into BMS
TC-100	Temperature Controller	ProFire	built into BMS
LSLL-100	Level Switch Low Low	Murphy	MLS-020 electric level control switch, 2" MNPT
SPV-100	Speed Restrictor Valve	SMC	1/4" NPT Restrictor speed valve, AS4000

TAG	INSTRUMENT TYPE	MAKE	DESCRIPTION
BRN-100	Burner	Maxon	2" NPT, 2" MAXON Ventite, Part# 04153
BRNP-100	Burner (Pilot)	Wenco	Wenco Pilot Assembly, Part# 1000B
IGN-100	Igniter	ICI	Pilot Burner Igniter/Flame Rod
S-100	Line Heater Shell	Recom	78" x 24"', 3 MMBtu/hr
PHC-100	Preheat Coil	Enlyn	6" sch 80, 14-pass, 900# RF flanged ends, 100% RT, PWHT
V-300	Fuel Gas Scrubber	Low Tech	6" x 36", sweet service
HLSD-300	High Level Shutdown	Low Tech	Integral w/ scrubber

All tagged items inspected and carrying valid certifications, where applicable

ENLYN

Exhibit 6.1

CONTRACT REVIEW

Job Number: 14-561-01 Date: Dec 19/14

Owner Company: NuVista Energy Ltd.

Description of Job: 2MM BTU/HR Line Heater

Code of Construction:

ASME B31.3 ☑ ASME B31.5 ☐ CSA Z662 ☐

Service: Normal Fluid

RESPONSIBLE FOR	OWNER (yes/no)	CONTRACTOR (yes/no)
Client has reviewed & approved Enlyn's AQP Registered Program	Yes	
Drawings and Specifications	No	Yes
Construction Drawings	No	Yes
Design AND Design Registration	No	Yes
Document Control	No	Yes
Material Procurement	No	Yes
Material Identification and Traceability	No	Yes
Welding	No	Yes
Non Destructive Examination	No	Yes
Piping Lot Sizes	No	Yes
Radiography Film Retention	No	Yes
Heat Treatment	No	Yes
Measuring and Test Equipment	No	Yes
Pressure Tests	No	Yes
Certification of Construction Using AB-83 or AB-83 Partial or AB-83F	N/A	N/A
Certifying the installation and readiness for operation using an AB-81	N/A	
Record Retention If contractor wants to keep the original records, i.e. test charts or radiography results, it should be noted in the comments section	**Copies only of all Records**	**Must keep all originals**

Additional Comments:

The Alberta Pressure Equipment Safety Regulations (PESR) Para 11 require the Owner to have an ABSA authorized Quality System if they assume any of the Quality System functions listed above. Quality System is identified in CSA B51 Section 4.9

Owners Representative: _____ Date: _____

Date Contracted: Dec 19/14

Enlyn Representative: Mark S Rajher Date: Dec 19/14

01

PURCHASE ORDER

Date:	12-Dec-14	Purchase Order Number:		E13-250-PO-04	Rev. 0
Client:	NuVista Energy Ltd.	AZTEC Project Number:		E13-250	
Vendor:	Enlyn Process Systems	Prepared by:		Vanessa Antle	
Address:	5509 Broadway Avenue	Phone:	(780) 513-4111	e-mail:	vantle@azeng.com
	Blackfalds, AB	Project Location:		(HZ 15-17) 02-16-068-08 W6M	
Contact:	Mark Rajher	Project Description:		Single Well Tie-In	
Phone:	(403) 885-9262	Vendor Quote Number:		QT-14-561-R0	
Fax:	(403) 885-9265	Drawing Number:		n/a	

NUVISTA ENERGY

PURCHASE ORDER ITEM:

Description:	Line Heater	Client Code:	9410.441
Delivery:	2-3 Weeks ARAD	AFE Number:	N2136033
ExW:	Blackfalds, AB	AZTEC Code:	n/a

Item No.	Quantity	Item Description	Price/Unit	Extension
1	1	**2 MMBtu/hr Sour Service Line Heater** Size: 76" OD x 24' Fuel Gas Preheat Coil Preheat Coil 1- 3" Sch 160, SA-106 GrB, 8-Pass Coil with ANSI 1500 RTJ Flanged Connections 3125 psi @ -20 to 200 °F, 100% RT, PWHT, 1/8" C.A. Reheat Coil 1- 3" Sch 160, SA-106 GrB, 8-Pass Coil with ANSI 1500 RTJ Flanged Connections 3125 psi @ -20 to 200 °F, 100% RT, PWHT, 1/8" C.A. Fuel Gas Preheat Coil 1" Sch 80, A-106B pipe, 3000# A-105N fittings Socketwelded construction, hydrotested to 435 psi Firetube 1 - 24" OD sch 20 Fire Tube, 48' overall effective length, mitred return removable firetube & 20' exhaust stack, fire tube flux rate 10,000 BTU/hrft2 Fuel Gas Scrubber Size: 6' ID x 36 S/S, Vertical 2 Phase, Design Pressure 150 psig, Design Temperature 100 degrees F Vessel Includes Internal HLSD for fuel gas supply. PROFIRE 2100 Burner Management System Combustion Safety Controller CSA B149.3 Compliant Fuel Gas Valve Train Structural Steel Skid 8'-0" Wide x 37'-0" Long Insulation/Building 1 ½" thick Mineral Wool insulation .020 stucco embossed aluminum cladding eater shell insulated and cladded, excluding end plates 5' x 2' x 5' Tall Shed Style Foam Panel Building (enclose over controls) w/ one door hatch and latch 28 ga ASTM A792 Gr.33 steel, 1.5" thk polyurethane foam injected panel construction galvalume interior/exterior	$ 148,858.96	$ 148,858.96

PURCHASE ORDER SUBTOTAL	$ 148,858.96
PURCHASE ORDER GST	$ 7,442.95
PURCHASE ORDER TOTAL	$ 156,301.91

Mail all invoices to:
NuVista Energy Ltd.
c/o Aztec Engineering Inc.
11517-89 Avenue
Grande Prairie, AB T8V 5Z2

Shipping Instructions:

Hold for further instructions

Approved By: _____
Jon Grant, Aztec Engineering Inc.

Aztec Engineering Inc. has issued this purchase order on behalf of Aztec's client as approved by the client. Payment will be issued to the vendor by the client upon the approval of the invoice by Aztec. Invoices must reference the purchase order number. If required, please forward credit applications to Aztec for completion and execution.

11517-89 Avenue, Grande Prairie, Alberta, Canada, T8V 5Z2
PHONE: (780) 513-4111 FAX: (780) 513-4131 TOLL FREE 1-877-814-4111





V-300
FUEL GAS SCRUBBER
MFR: Enlyn
SIZE: 6" x 36" S/S
MAWP: 150 PSI @ 100°F

PS-100
PREHEAT COIL
MFR: ENLYN PROCESS SYSTEMS
MAWP: 3125 PSI @ 200°F
MATERIAL: A106 GR. B, SCH, 160 PIPE
X-RAY: 100% PWHT: YES
CA: 1/8"
SERVICE: SOUR
PASSES: 8

PS-101
REHEAT COIL
MFR: ENLYN PROCESS SYSTEMS
MAWP: 3125 PSI @ 200°F
MATERIAL: A106 GR. B, S160 PIPE
X-RAY: 100% PWHT: YES
CA: 1/8"
SERVICE: SOUR
PASSES: 8

H-100
LINE HEATER
MFR: ENLYN PROCESS SYSTEMS
SIZE: 66" x 26' S/S
DUTY: 2,000,000 BTU/HR
FIRETUBE: 24" X 48' O/A
REMOVABLE FIRETUBE EXHAUST STACK
FIRETUBE FLUX RATE 10,000 BTU/HR/SQ.FT

BMS-100
BURNER MANAGEMENT SYSTEM
MODEL: PROFIRE 2100
24 VDC
BMS, THERMOWELL, THERMOCOUPLE
TEC CABLES, NEO VALVES, SPEED VALVE

BILL OF MATERIALS

BMS-100	PROFIRE, PF-2100 BURNER MANAGEMENT SYSTEM
PCV-100	1" NPT FISHER MODEL 627R, 1/8" PORT, 46-95 PSI SPRING
PCV-101/102	1/4" NPT FISHER MODEL 67CFR, 0-30 PSI SPRING WINTERS 0-60 PSI PGAUGE,2.5" FACE,1/4"CBM
PCV-103	1/4" NPT FISHER MODEL 67CFR, 0-30 PSI SPRING PROFIRES 0-15 PSI PGAUGE,2.5" FACE,1/4"CBM
PCV-300	1" NPT FISHER 627R, 5-20 PSI 1/2" ORIFICE
PSLL-100	1/2" PRESSURE SWITCH, MODEL#6900GZE12, 3-20 PSI
PSHH-100	1/2" PRESSURE SWITCH, MODEL#6900GZE12, 3-20 PSI
SSV-100/102	1" FNPT ASCO SOLENOID, PART#HV298568002, 316SS
SOV-100	1/4" NPTF, ASCO SOLENOID,3-WAY PART# EF8314G301
SOV-105	1/4" NPTF, ASCO SOLENOID, PART#HV427246002
TV-100	1", KIMRAY, 1400 SMT, PO
PI-100	1/4" MNPT, WINTERS TYPE 0-200 PSI
PI-101-103	1/4" MNPT, WIKA TYPE 0-30 PSI
PI-300	1/2" MNPT, WIKA TYPE 0-300 PSI, 3" DIAL, LIQUID FILLED
TI-100	TREND TEMP INDICATOR, -20°C-120°C, DUAL SCALE, 3" DIAL, 6" THERMOWELL
TE-101	TC-10 DUAL-HEAD TYPE K THERMOCOUPLE, 1/2 MNPT
LSLL-100	MLS-020 ELECTRIC LEVEL CONTROL SWITCH, 2" MNPT
SPV-100	1/4" NPT RESTRICTOR SPEED VALVE, AS4000
BRN-100	2" NPT, 2" MAXON VENTITE, PART#04153
BRNP-100	WENCO PILOT ASSEMBLY, PART NO. 1000B
IGN-100	PILOT BURNER IGNITER / FLAME ROD
LG-100	REDLINE GLASS SIGHTGLASS C/W CS GAUGECOCKS
PSV-300	1"x1" NPT MERCER, SET @ 150 PSI
HLSD-300	2" NPT INTERNAL HLSD INTEGRAL WITH SCRUBBER
TH-100	THIEF HATCH, HAWKEYE, SET @ 16 OZ

VALVE LIST

QTY-6	1/4" 3M NPT BALL VALVE
QTY-3	1" 3M NPT BALL VALVE
QTY-1	1/2" 3M NPT BALL VALVE
QTY-1	3" 150# RFWN BALL VALVE
QTY-1	1/2" 6M NPT NEEDLE VALVE

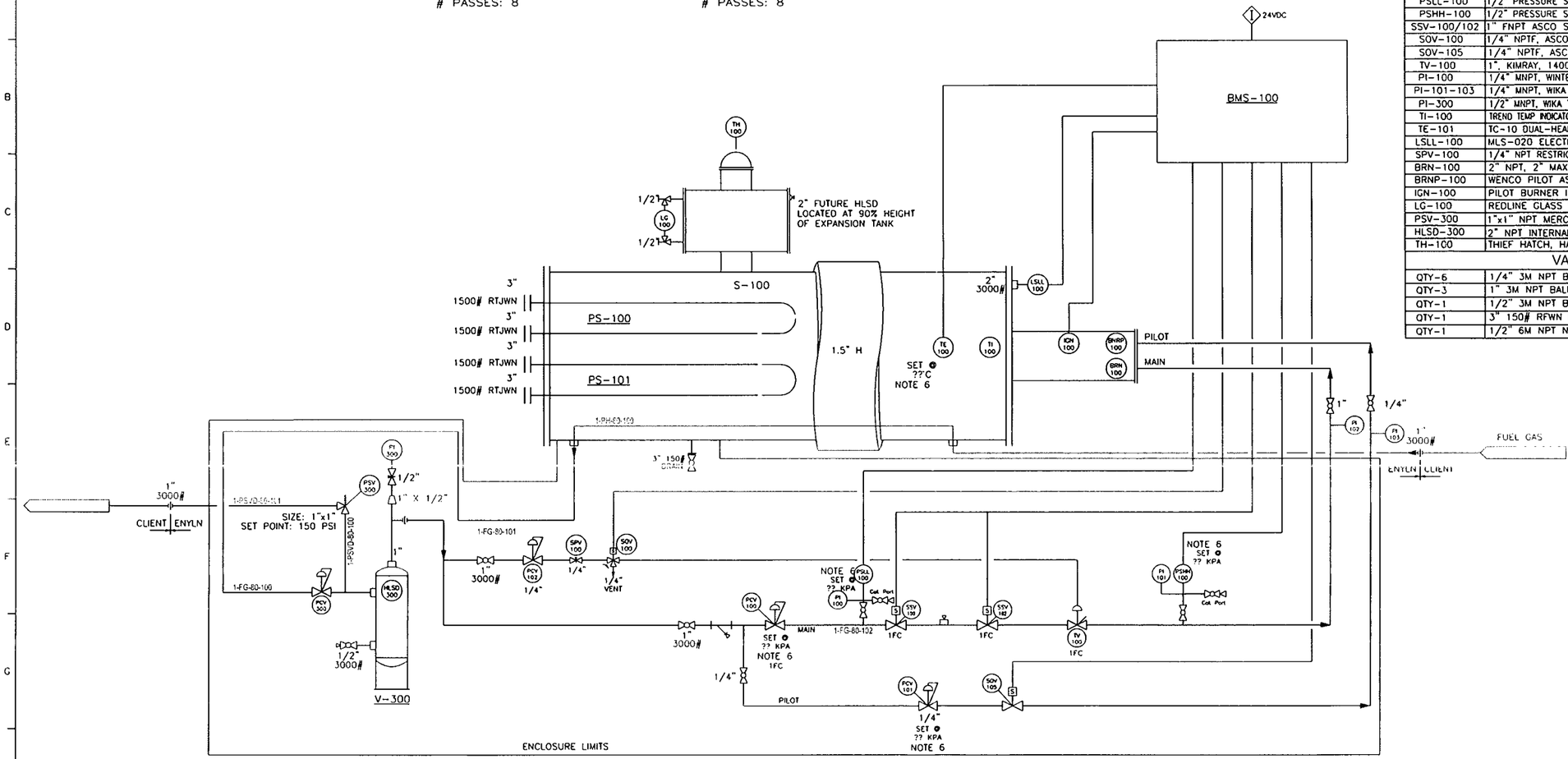

NOTES:
1. PIPE SUPPORTS WHERE REQUIRED.
2. SHIP LOOSE ITEMS TO BE BOXED AND SEALED PRIOR TO SHIPMENT (STOCK GASKETS, STOCK BOLTS & NUTS, MISC. ELECTRICAL).
3. PLUG ALL OUTLETS PRIOR TO SHIPMENT.
4. INSULATION: 1.5" FIBERGLASS TANK WRAP W/.020 FLAT ALUMINUM JACKET C/W STAINLESS STEEL SCREWS (SHELL ONLY).
5. ELECTRICAL BY CLIENT.
6. SETPOINTS TO BE FIELD DETERMINED.

REV.	DATE	REVISIONS	DRAWN BY	CHK'D BY	APPR'D BY
4	1/12/15	ADDED DETAIL FOR HLSD/ ADJUSTED BMS	EJL	MSR	
3	1/7/15	ADDED VALVE LIST AND REMOVED LINE	EJL	MSR	
2	1/5/15	ADJUSTED VALVE TRAIN SET-UP	EJL	MSR	
1	12/22/14	CHANGED BILL OF MATERIALS AND PROCESS LINES	EJL	MSR	
5	4/17/15	AS BUILT	EJL	MSR	

DWG. NO. | DWG. TITLE
REFERENCE DRAWINGS

NUVISTA ENERGY LTD

THIS DRAWING IS THE PROPERTY OF ENLYN GROUP AND IS FOR THE CONFIDENTIAL USE ONLY OF THE RECIPIENT IN THE USE OF THIS DRAWING THE RECIPIENT EXPRESSLY AGREES THAT IT SHALL NOT BE USED IN ANY WAY DETRIMENTAL TO THE INTERESTS OF ENLYN GROUP IT SHALL BE RETURNED UPON REQUEST AND THAT IT SHALL NOT BE REPRODUCED, ALTERED OR OTHERWISE DISPOSED OF IN ANY WAY WITHOUT THE WRITTEN APPROVAL OF ENLYN GROUP

ENLYN

2.0 MMBTU LINE HEATER PACKAGE
PIPING & INSTRUMENTATION DIAGRAM

JOB NO.	DRAWING NUMBER	SCALE	DRAWN BY	DATE	REV
14-561-01	14-561-B-01	N.T.S	EJL	12/19/14	5

THIS DRAWING IS THE PROPERTY OF ENLYN PROCESS SYSTEMS AND IS NOT TO BE USED FOR ANY PURPOSE OTHER THAN FOR WHICH IT IS INTENDED

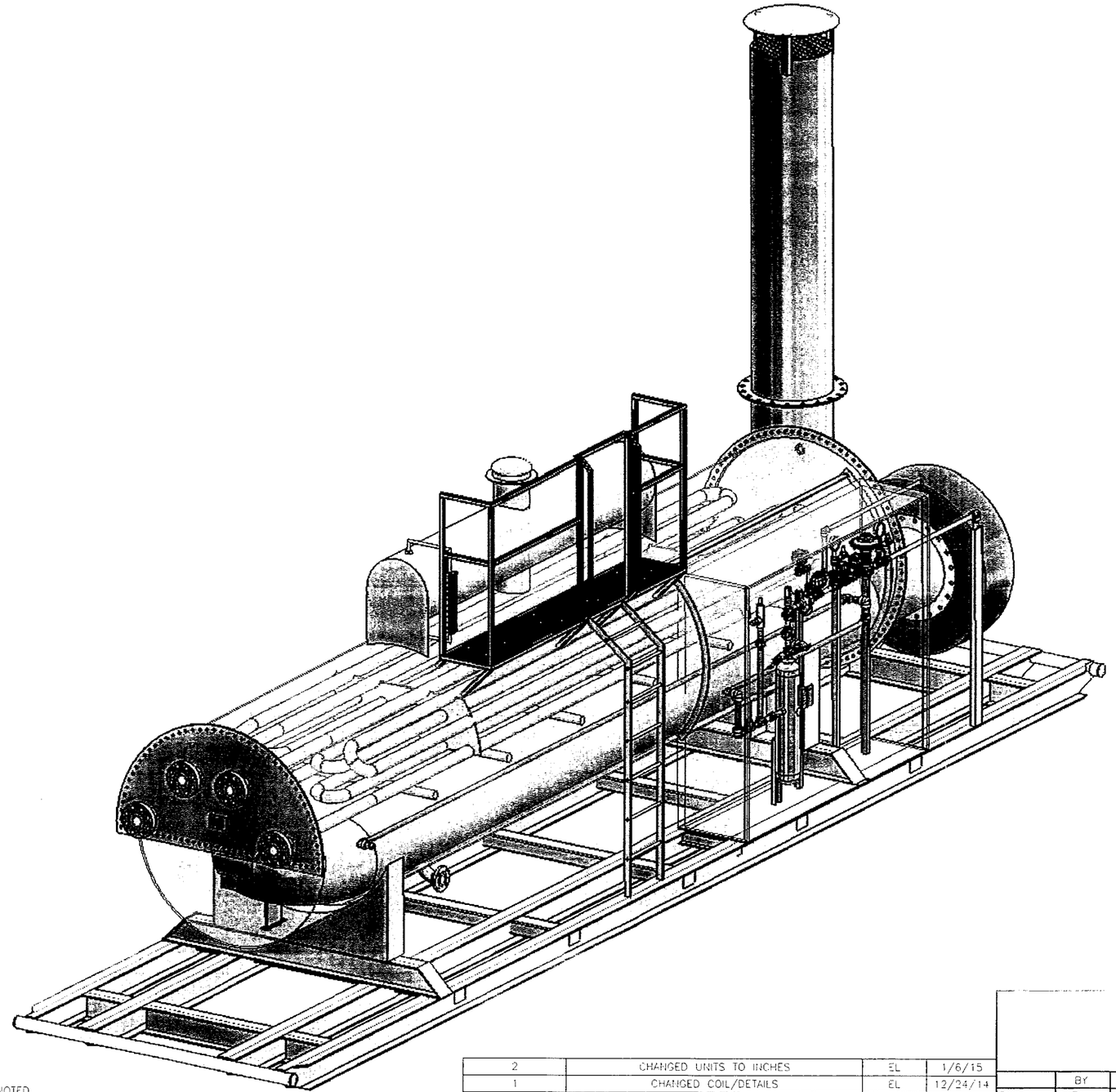

ISSUED FOR CONSTRUCTION

JAN 7/15

GENERAL NOTES:
1. ALL DIMENSIONS ARE IN INCHES UNLESS OTHERWISE NOTED
2. SANDBLAST & PAINT ENAMEL GREY
3. GRIND ALL SHARP EDGES
4. FINAL INSPECTION REQUIRED

REV	DESCRIPTION	DWN BY	DATE
2	CHANGED UNITS TO INCHES	EL	1/6/15
1	CHANGED COIL/DETAILS	EL	12/24/14
0	ISSUED FOR REVIEW	EL	12/17/14

REVISIONS

	BY	DATE
DWN	E.L.	12/17/14
CHK		
ENG APP		
QC APP		

2MM BTU/HR LINEHEATER

GENERAL ASSEMBLY

Customer: NuVista Energy

DWG NO:	REV	SHT	Shop Order:
14-561-01-C	2	1/11	14-561-01

THIS DRAWING IS THE PROPERTY OF ENLYN PROCESS SYSTEMS AND IS NOT TO BE USED FOR ANY PURPOSE OTHER THAN FOR WHICH IT IS INTENDED

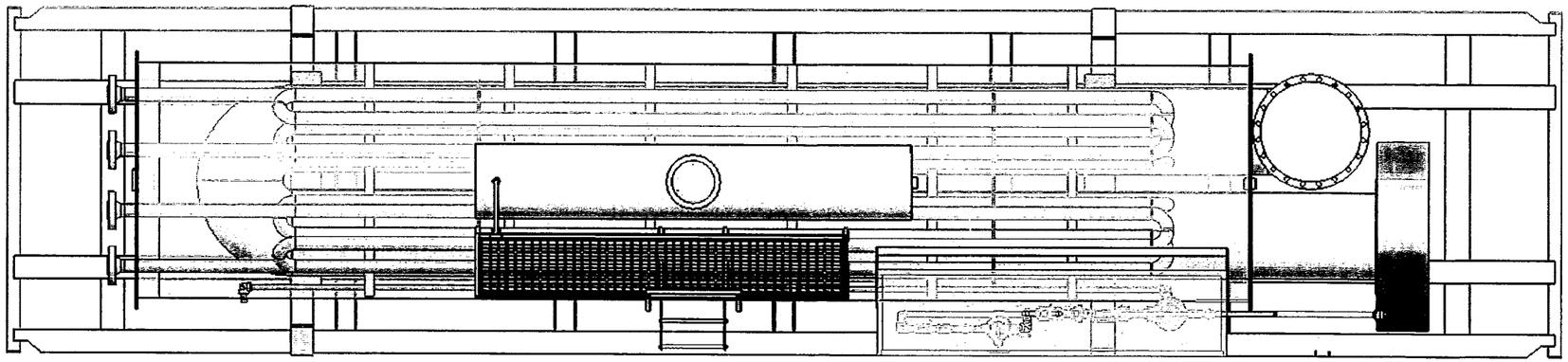

PLAN VIEW

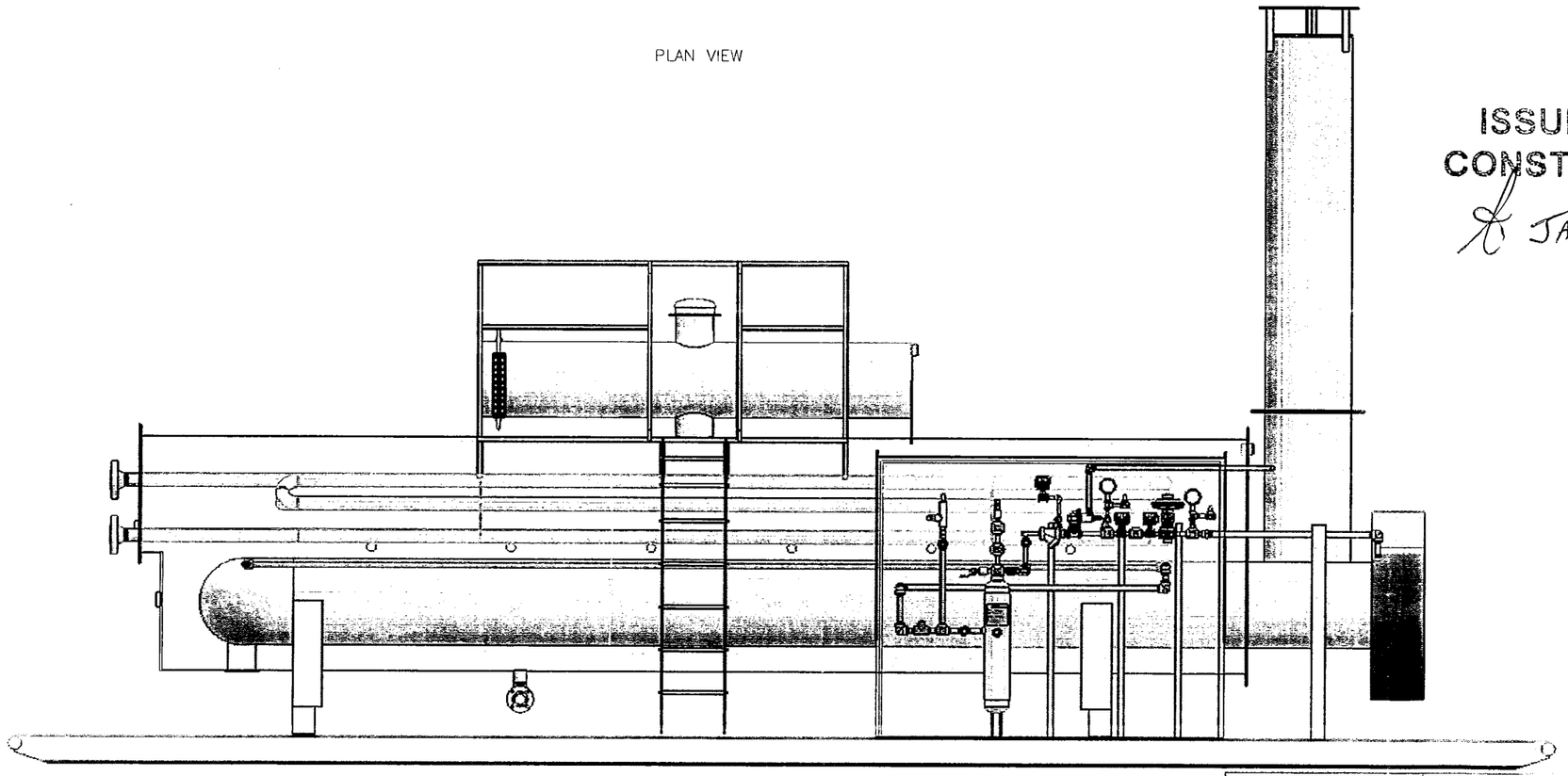

SECTION VIEW

ISSUED FOR CONSTRUCTION
JAN 7/15

GENERAL NOTES:
1. ALL DIMENSIONS ARE IN INCHES UNLESS OTHERWISE NOTED.
2. SANDBLAST & PAINT ENAMEL GREY
3. GRIND ALL SHARP EDGES.
4. FINAL INSPECTION REQUIRED.

REV	DESCRIPTION	DWN BY	DATE
2	CHANGED UNITS TO INCHES	EL	1/8/15
1	CHANGED COIL/DETAILS	EL	12/24/14
0	ISSUED FOR REVIEW	EL	12/17/14

REVISIONS

ENLYN

2MM BTU/HR LINEHEATER
GENERAL ASSEMBLY

	BY	DATE
DWN	E.L.	12/17/14
CHK		
ENG APP		
QC APP		

Customer:
NuVista Energy

DWG NO:	REV	SHT	Shop Order:
14-561-01-0	2	2/11	14-561-01

THIS DRAWING IS THE PROPERTY OF ENLYN PROCESS SYSTEMS AND IS NOT TO BE USED FOR ANY PURPOSE OTHER THAN FOR WHICH IT IS INTENDED

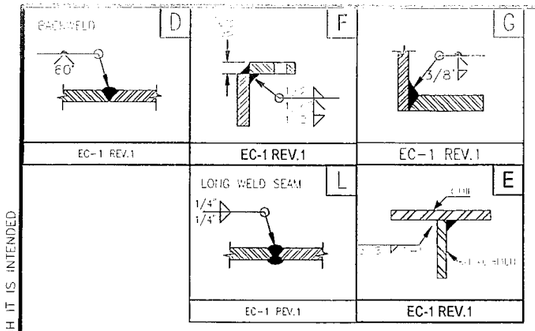

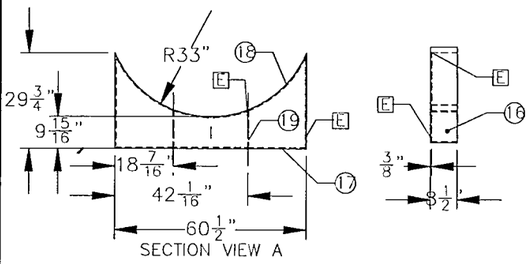

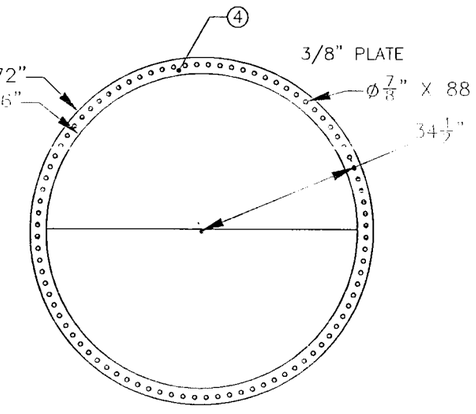

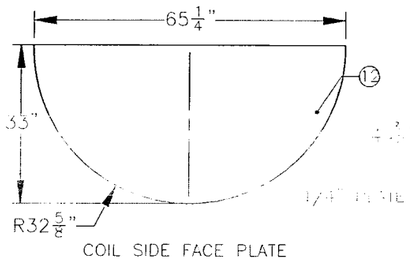

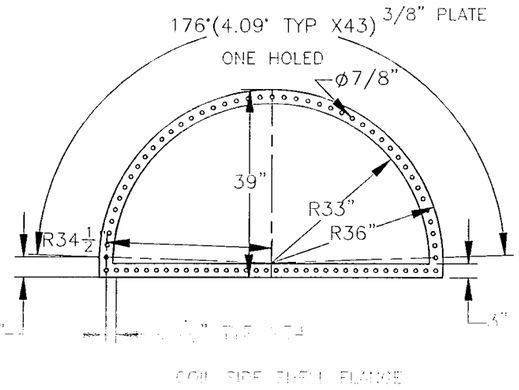

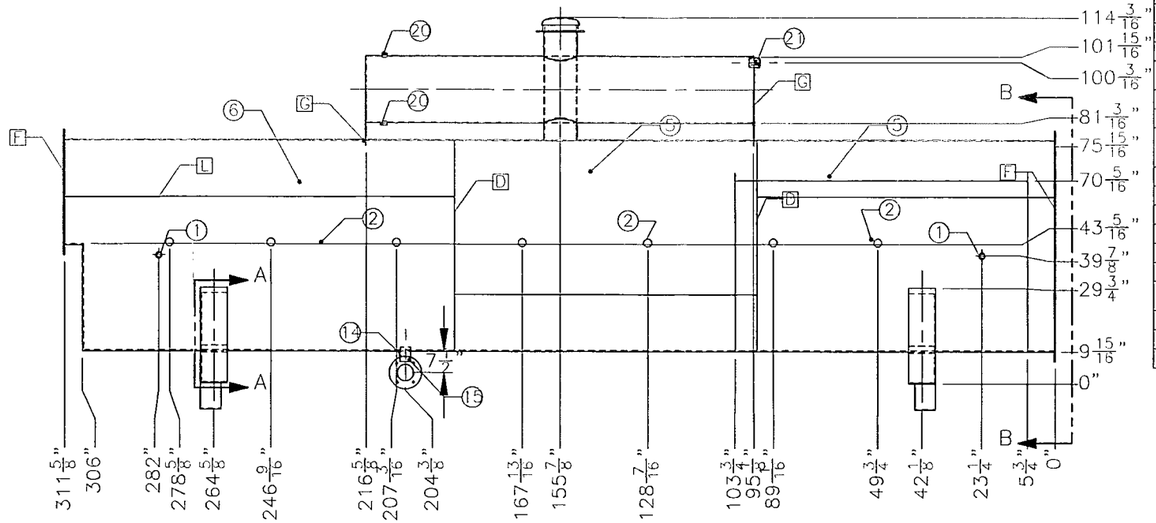

ITEM NUMBER	PART	QTY	MATERIAL	CUT LENGTH	HEAT NUMBER
1	1" 3M THREADED COLLAR	2	SA-105-N		
2	2" SIPO PIPE	7	SA-106-B	A5"	
3	3/8" PLATE (72" X 39")	1	SA-36/44W		
4	3/8" PLATE (72" OD)	1	SA-36/44W		
5	1/4" ROLLED PLATE (65 1/4" OD)	2	SA-36/44W	96"	
6	1/4" ROLLED PLATE (65 1/4" OD)	1	SA-36/44W	120"	
7	1/4" ROLLED PLATE (24 1/4" OD)	1	SA-36/44W	122"	
8	1/4" FLAT PLATE (24 1/2" X 34 1/4")	1	SA-36/44W		
9	8" S40 PIPE	1	SA-106-B	7 1/4"	
10	3" S40 PIPE	1	SA-106-B	10"	
11	8" THIEF HATCH	1	HAWKEYE MODEL 200THTH		
12	1/4" PLATE (65 1/4" X 33")	1	SA-36/44W		
13	1/4" PLATE (11 3/4" OD)	1	SA-36/44W		
14	3" S40 LR ELBOW	1	SA-105N		
15	3" #150 S40 FLANGE	1	SA-105N		
16	3/8" FLAT PLATE (8 1/2" X 29 3/4")	2	SA-105N		
17	3/8" FLAT PLATE (8 1/2" X 60 1/2")	1	SA-105N		
18	3/8" ROLLED PLATE TO R33" (8 1/2" X 76 9/16")	1	SA-105N		
19	3/8" FLAT PLATE (3 1/8" X 11 3/8")	2	SA-105N		
20	3/4" 3M TOL	2	SA-105N		
21	2" 3M THREADED COLLAR	1	SA-105-N		

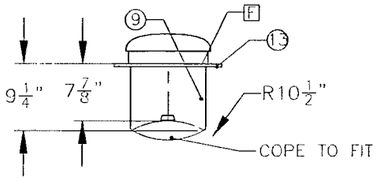

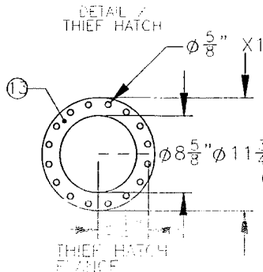

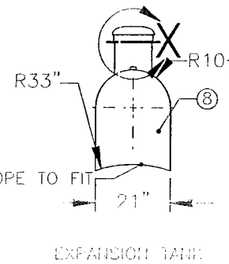

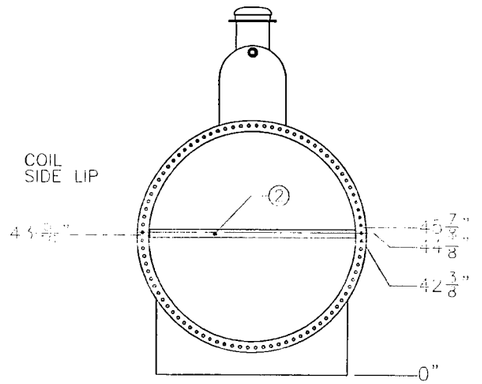

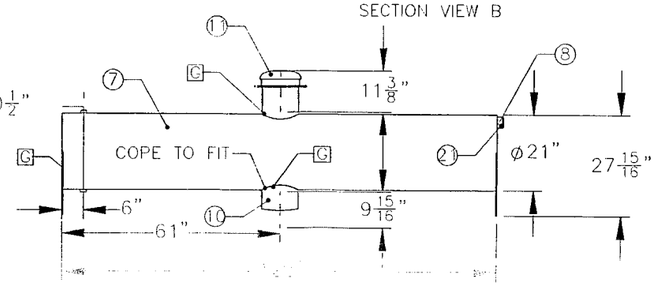

ISSUED FOR CONSTRUCTION
JAN 7/15

GENERAL NOTES:
1. ALL DIMENSIONS ARE IN INCHES UNLESS OTHERWISE NOTED
2. SANDBLAST & PAINT.
3. GRIND ALL SHARP EDGES
4. FINAL INSPECTION REQUIRED

REV	DESCRIPTION	DWN BY	DATE
2	CHANGED UNITS TO INCHES	EL	1/6/15
1	CHANGED COIL/DETAILS	EL	12/24/14
0	ISSUED FOR REVIEW	EL	12/17/14

REVISIONS

ENLYN

2MM BTU/HR LINEHEATER
HEATER SHELL ASSEMBLY

	BY	DATE
DWN	EL	12/17/14
CHK		
ENG APP		
QC APP		

Customer: NuVista Energy

DWG NO:	REV	SHT	Shop Order:
14-561-01-0	2	8/11	14-561-01

THIS DRAWING IS THE PROPERTY OF ENLYN PROCESS SYSTEMS AND IS NOT TO BE USED FOR ANY PURPOSE OTHER THAN FOR WHICH IT IS INTENDED

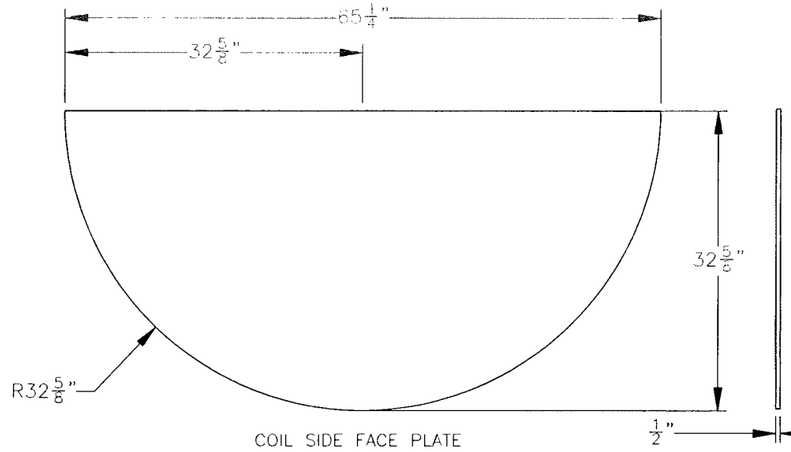

COIL SIDE FACE PLATE

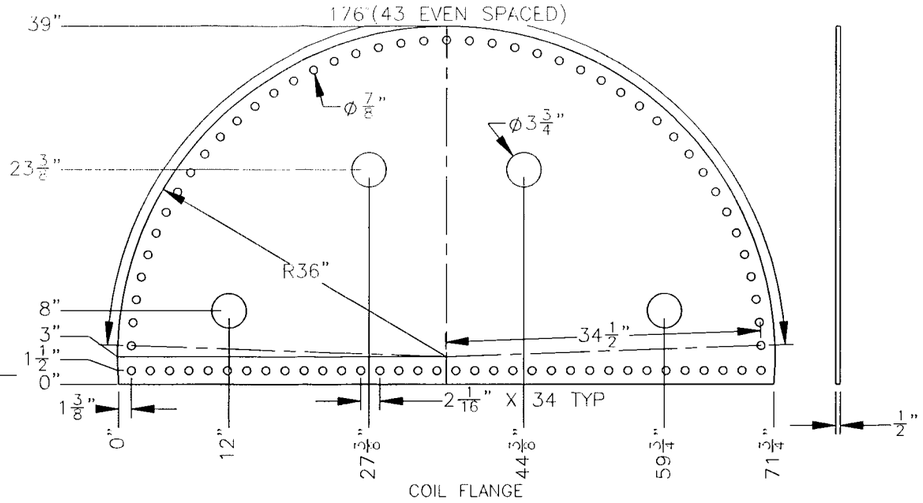

COIL FLANGE

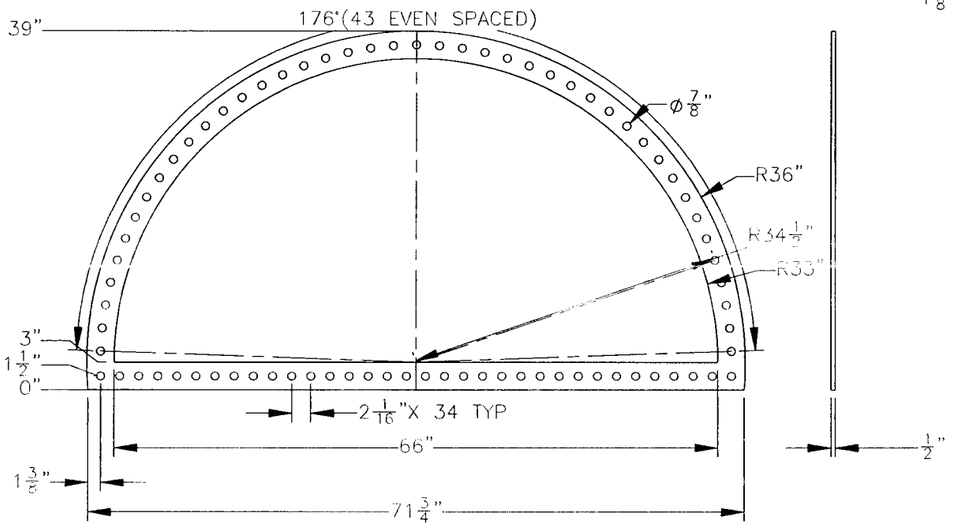

COIL SIDE SHELL FLANGE

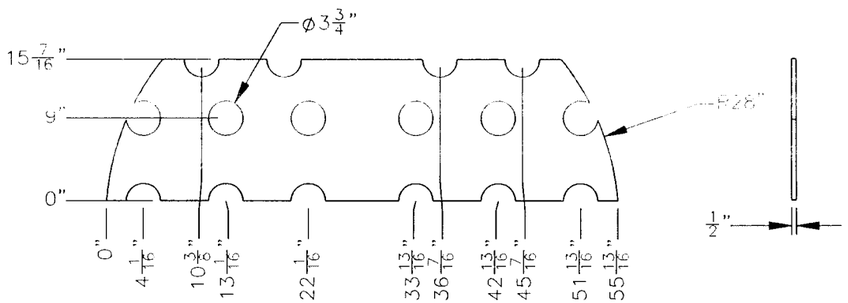

TUBE SHEET X2

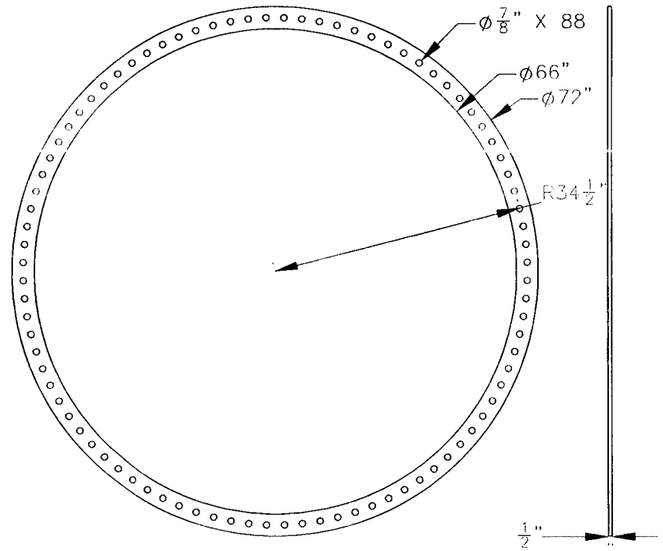

SUPPLY SIDE SHELL FLANGE

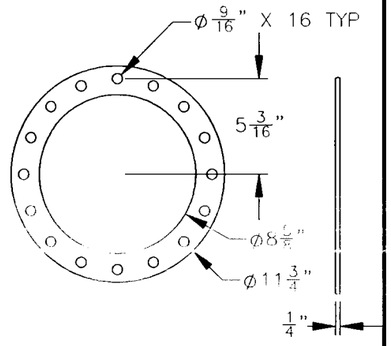

THIEF HATCH FLANGE

ISSUED FOR CONSTRUCTION

(RW) Jan 7/14

GENERAL NOTES:

1. ALL DIMENSIONS ARE IN INCHES UNLESS OTHERWISE NOTED.
2. BREAK ALL SHARP EDGES.
3. GRIND ALL SLAG FREE.
4. FINAL INSPECTION REQUIRED.

REV	DESCRIPTION	DWN BY	DATE
0	ISSUED FOR REVIEW	EL	1/7/15

REVISIONS

ENLYN

2MM BTU/HR LINEHEATER
CUT PART LIST

	BY	DATE
DWN	E.L.	1/7/15
CHK		
ENG APP		
QC APP		

Customer: NuVista Energy

DWG NO:	REV	SHT	Shop Order:
14-561-01-0	0	1/1	14-561-01

THIS DRAWING IS THE PROPERTY OF ENLYN PROCESS SYSTEMS AND IS NOT TO BE USED FOR ANY PURPOSE OTHER THAN FOR WHICH IT IS INTENDED

3	4
EC-1 REV.1	EC-1 REV.1

ITEM	DESCRIPTION	MATERIAL	HEAT NUMBER
1	3/8" PLATE (72 OD)	SA-36/44W	
2	3/8" PLATE (32 OD)	SA-36/44W	
3	3/8" PLATE (32X32 1/2")	SA-36/44W	
4	STD PIPE (24" OD)	SA-53-B	
5	3/8" PLATE (32"X32 1/2")	SA-36/44W	
6	3/8" PLATE (28" OD)	SA-36/44W	
7	2" ANGLE 1/4" THK	SA-36/44W	
8	EXPANDED METAL 1/4" THK X 24 1/4" OD	SA-36/44W	
9	4" COLLAR	SA-234-WPB	
10	1/2" PLATE (10" X 2")	SA-36/44W	
11	1/2" (8" X 7 3/4")	SA-36/44W	
12	2" COLLAR	SA-234-WPB	

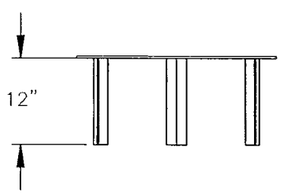

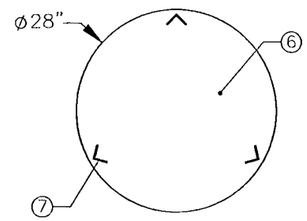

FIRETUBE CAP

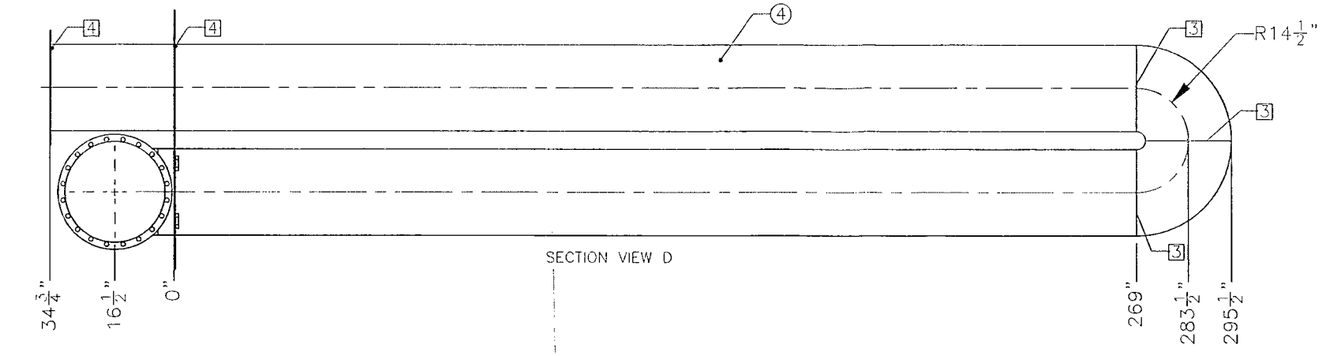

SECTION VIEW D

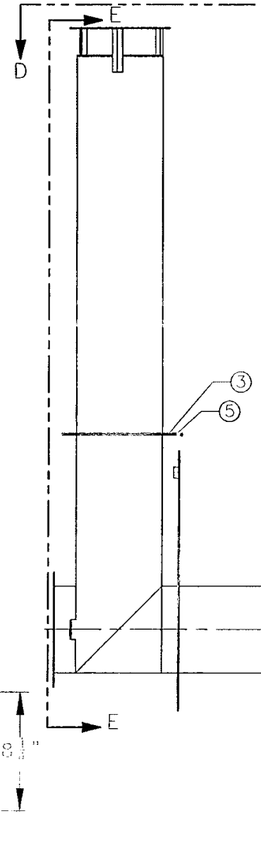

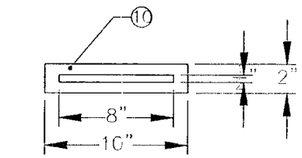

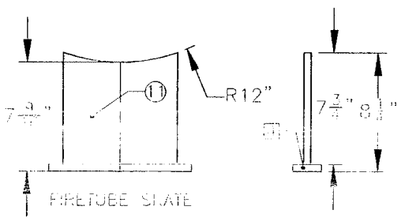

FIRETUBE SKATE

FIRETUBE

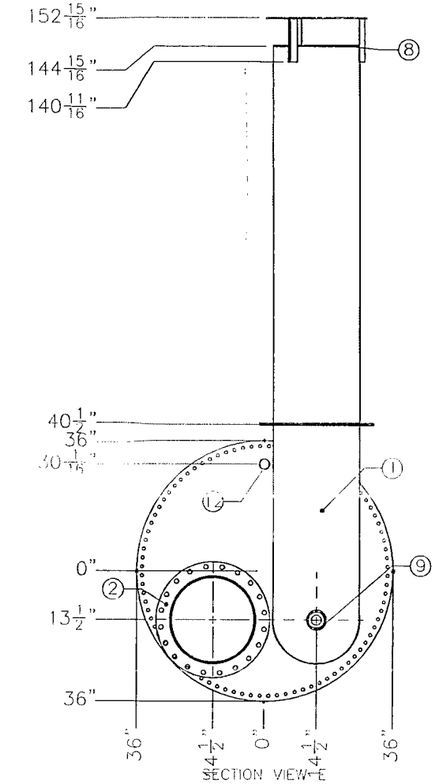

SECTION VIEW E

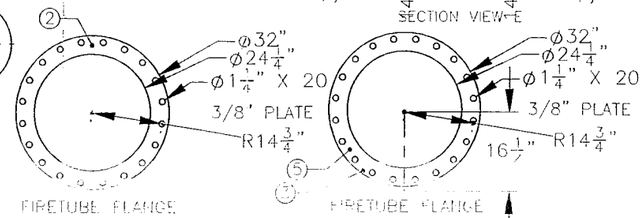

FIRETUBE FLANGE

FIRETUBE FLANGE

ISSUED FOR CONSTRUCTION
JAN 7/15

GENERAL NOTES:
1. ALL DIMENSIONS ARE IN INCHES UNLESS OTHERWISE NOTED
2. SANDBLAST & PAINT.
3. GRIND ALL SHARP EDGES
4. FINAL INSPECTION REQUIRED

REV	DESCRIPTION	DWN BY	DATE
2	CHANGED UNITS TO INCHES	EL	1/8/15
1	CHANGED COIL/DETAILS	EL	12/24/14
0	ISSUED FOR REVIEW	EL	12/17/14

REVISIONS

ENLYN

	BY	DATE
DWN	E L	12/17/14
CHK		
ENG APP		
QC APP		

2MM BTU/HR LINE HEATER

FIRETUBE AND STACK DRAWING

Customer: NuVista Energy

DWG NO:	REV	SHT	Shop Order:
14-561-01-0	2	9/11	14-561-01

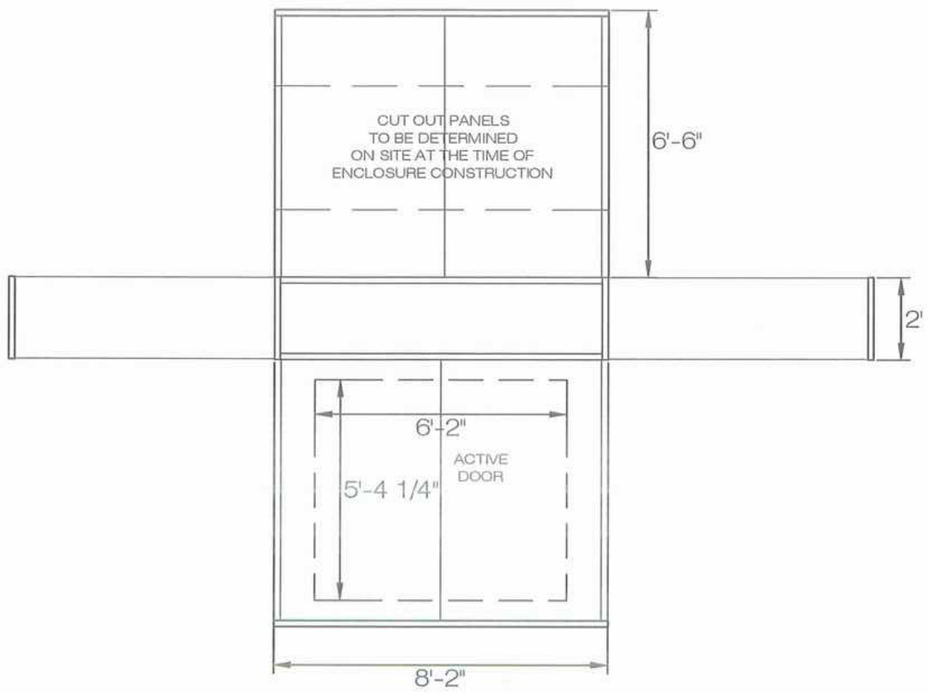

BUILDING NOTES:

WALL CONSTRUCTION
- POLYURETHANE WALL PANELS 1 ½" (R12)
  TAN EXTERIOR / WHITE INTERIOR

ROOF CONSTRUCTION
- POLYURETHANE WALL PANELS 1 ½" (R12)
  TAN EXTERIOR / WHITE INTERIOR

DOORS
- ONE (1) 6' 2" X 5' 4 ¼"' DBL. POLYURETHANE DOOR

VENTILATION
- ONE (1) 9" x 7" LOUVER

OTHER
- CAULKING, PATCHES AND SCREWS

Approved (W)

REV	DESCRIPTION	DRAWN BY	DATE
-	-	-	-
-	-	-	-
-	-	-	-
-	-	-	-
B	ISSUED FOR APPROVAL - CHANGED ENCLOSURE HEIGHT AND ROOF STYLE (FLAT)	FS	2015.01.26
A	ISSUED FOR APPROVAL	FS	2015.01.22

REVISIONS

METALEX
METAL BUILDINGS INC.
4204 - 46 Avenue, PO Box 1058
Stettler, AB T0C 2L0
P - 403.742.1300 I F - 403.742.1308
E - info@mmbi.ca I W - www.mmbi.ca

PROJECT: 14-561-01
LOCATION: -
DWG NO.: 15691-I
SHEET NO.: 1 OF 1
SCALE: NTS
CLIENT: ENLYN PROCESS SYSTEMS
TITLE: 2' 0" x 8' 2" x 6' 6" POLYURETHANE ENCLOSURE FLAT ROOF STYLE

ENLYN
enlyn.com

INDIRECT FIRED HEATER COIL TRAVEL SHEET

EXHIBIT 24.1

DO NOT START CONSTRUCTION WITHOUT AI REVIEW TRAVEL SHEET Revision #: 0

AI Review: Review Date: Jan 14 /15

Serial No.: 1456101 Job No.: 14-561-01 Coil Type: 3" 1500#RTJ Spit Bundle

DWG No. 14-561-01-C DWG Rev No.: 2 Travel Sheet Initiation By: Mark Rajher

Seq.	Item	Comments	Q.C.I.	Date	A.I. Hold Points	A.I.	Date	Owner	Date
1	Calculations in File			01/14/15	*		01/14/15		
2	Release of App'd Dwg.			01/14/15	*		01/14/15		
3	Materials Examined			01/16/15					
4	Heat Numbers Recorded			01/16/15	*		2.3.15		
5	MTRs Checked			01/16/15	*		2.3.15		
6	W.P.S. Checked			01/19/15	*		2.3.15		
7	Welders Qualified			01/19/15	*		2.3.15		
8	Thicknesses Verified and Recorded			01/19/15					
9	Fit-up Examination(s) – Fit-up Acceptable			01/20/15	*		2.3.15		
9	Impact Tests								
11	Welds Examined			01/23/15	*		2.3.15		
12	Welder I.D. Checked			01/19/15	*		2.3.15		
13	Final External Inspection			01/22/15	*		2.3.15		
14	Radiography			01/22/15	*		2.3.15		
15	Other N.D.E.								
16	Final Ext. Prior to P.W.H.T.			01/22/15	*		01/23/15		
17	PWHT Chart Checked			02/02/15	*		2.3.15		
18	Hydrostatic Test	Coil No. 1 Gauge # EP16 Coil No. 2 Gauge # EP17		03/02/15	* *		2.3.15		
19	CRN Drawing	CRN# W 3264.213			*		01/14/15		
20	N.C.R. #								
21	Nameplate Stamping			03/02/15	*		2.3.15		
22	Data Report (AB-28) completed			03/02/15	* *		2.3.15		
23	Nameplate Installation			03/02/15					

The Authorized Inspector shall be presented with the Travel Sheet prior to construction so that he can designate additional inspection points and/or Hold Points. Any revisions shall be marked with a delta symbol with revision number and described at the bottom of this page.

#6 = ECI is not acceptable

* Denotes an A.I. Inspection Point ** Denotes an A.I. Hold Point

ABSA
the pressure equipment safety authority

MANUFACTURER'S DATA REPORT FOR INDIRECT FIRED HEATER COILS

AB-28 2011-08

PARTIAL ☐ A# 640432

Manufactured By: Enlyn Corp (5509 Broadway Ave, Blackfalds, Alberta T0M 0J0

Manufactured For: NuVista Energy Ltd. (3500, 700 2nd Street S.W. Calgary, Alberta, T2P 2W2

Ultimate Owner: NuVista Energy Ltd. (3500, 700 2nd Street S.W. Calgary, Alberta, T2P 2W2

Location of Installation: (HZ 15-17) 02-16-068-08 W6M

Manufacturer's Serial No.	Construction Drawing No.	CODE: ASME B31.3				Year Built
1456101	14-561-01-C Rev 2	Edition	2012	Addenda		2015

CONSTRUCTION

	Coil ID/Purpose	Design Pressure	Design Temp	Design Minimum Temp	Corrosion Allowance	Registered Drawing No.	CRN
a	Preheat	3125 psig	200F	-20F	1/8"	4244-3 Rev. 1	W3264.213
b	Reheat	3125 psig	200F	-20F	1/8"	4244-3 Rev. 1	W3264.213
c							
d							
e							

COIL

	Tubes			End Closures				Openings		
				Return Bend		Flanges				
	Mat'l Spec.	Diameter	Thickness	Mat'l Spec.	Thickness	Mat'l Spec.	Rating	Mat'l Spec.	Size/Type	Rating
a	SA-106 Gr.B	3"	0.438"	SA-234-WPB	0.438"	SA-105 N	1500 RTJ			
b	SA-106 Gr.B	3"	0.438"	SA-234-WPB	0.438"	SA-105 N	1500 RTJ			
c										
d										
e										

HEADERS/MANIFOLDS

	Purpose	Size	Shell		Ends			Openings		
			Mat'l Spec.	Thickness	Mat'l Spec.	Thickness	No	Mat'l Spec	Size/Type	Rating
f										
g										

TEST PRESSURE, NDE, POSTWELD HEAT TREATMENT AND SIZE

	Hydrostatic Test Pressure	Radiography (100% or % Random)	Other NDE (MT) (PT) (UT)	Postweld Heat Treatment		Overall Length	Heating Surface	Volume
				Temp.	Time			
a	4688 psig	100%	100% MT	1150 F	60 minutes	26'	154 sq. ft.	243 Litre
b	4688 psig	100%	100% MT	1150 F	60 minutes	26'	154 sq. ft.	243 Litre
c								
d								
e								
f								
g								

IMPACT TESTING: Exempt per table 323.2.2 Column A

REMARKS:

CERTIFICATE OF COMPLIANCE

We certify that the statements in this report are correct and that all details of design, material, construction, and workmanship of this coil bundle are in accordance with the above Provincial Registered Design.

Date Feb 03/2015 Signed Mark Rajher *(Representative)* For Enlyn Corp. *(Manufacturer)*

CERTIFICATE OF SHOP INSPECTION

I, the undersigned, a duly authorized boiler and pressure vessel inspector employed by ~~ABSA~~ of Alberta have inspected the above Heater Coils and state that, to the best of my knowledge and belief, the constructed is in accordance with the Alberta Safety Codes Act and Regulations. By signing this certificate, neither the inspector nor his or her employer makes any warranty, expressed or implied, concerning the vessel described in this manufacturer's data report. Furthermore, neither the inspector nor his or her employer shall be liable in any manner for any personal injury or property damage or a loss of any kind arising from or connected with this inspection.

Date 3 Feb. 2015 Signed [signature] NB 12495 AB AB 261

HEATER COIL MAXIMUM ALLOWABLE WORKING PRESSURE (PSIG)

OPTION	3 1/2" OD PIPE	PIPE SCHEDULE	BARE PIPE			CLASS 150 FLG			CLASS 300 FLG			CLASS 600 FLG			CLASS 900 FLG			CLASS 1500 FLG			CLASS 2500 FLG		
			CORROSION ALLOWANCE			CORROSION ALLOWANCE			CORROSION ALLOWANCE			CORROSION ALLOWANCE			CORROSION ALLOWANCE			CORROSION ALLOWANCE			CORROSION ALLOWANCE		
	OPTION		0"	1/16"	1/8"	0"	1/16"	1/8"	0"	1/16"	1/8"	0"	1/16"	1/8"	0"	1/16"	1/8"	0"	1/16"	1/8"	0"	1/16"	1/8"
			1	2	3	4	5	6	7	8	9	10	11	12	13	14	15	16	17	18	19	20	21
A	0.216"	STD	2257	1488	742	260	260	260	680	680	680	1360	1360	742	2035	1488	742	2257	1488	742	2257	1488	742
	HYDROSTATIC TEST PRESSURE	PSIG	3386	2232	1113	390	390	390	1020	1020	1020	2040	2040	1113	3053	2232	1113	3386	2232	1113	3386	2232	1113
B	0.300"	XH	3191	2395	1622	260	260	260	680	680	680	1360	1360	1360	2035	2035	1622	3191	2395	1622	3191	2395	1622
	HYDROSTATIC TEST PRESSURE	PSIG	4787	3593	2433	390	390	390	1020	1020	1020	2040	2040	2040	3053	3053	2433	4787	3593	2433	4787	3593	2433
C	0.437"	160	4788	3944	3125	260	260	260	680	680	680	1360	1360	1360	2035	2035	2035	3395	3395	3125	4788	3944	3125
	HYDROSTATIC TEST PRESSURE	PSIG	7182	5916	4688	390	390	390	1020	1020	1020	2040	2040	2040	3053	3053	3053	5093	5093	4688	7182	5916	4688
D	0.600" (NOTE A)	XXH	6818	5910	5031	260	260	260	680	680	680	1360	1360	1360	2035	2035	2035	3395	3395	3395	5655	5655	5031
	HYDROSTATIC TEST PRESSURE	PSIG	10227	8865	7547	390	390	390	1020	1020	1020	2040	2040	2040	3053	3053	3053	5093	5093	5093	8483	8483	7547

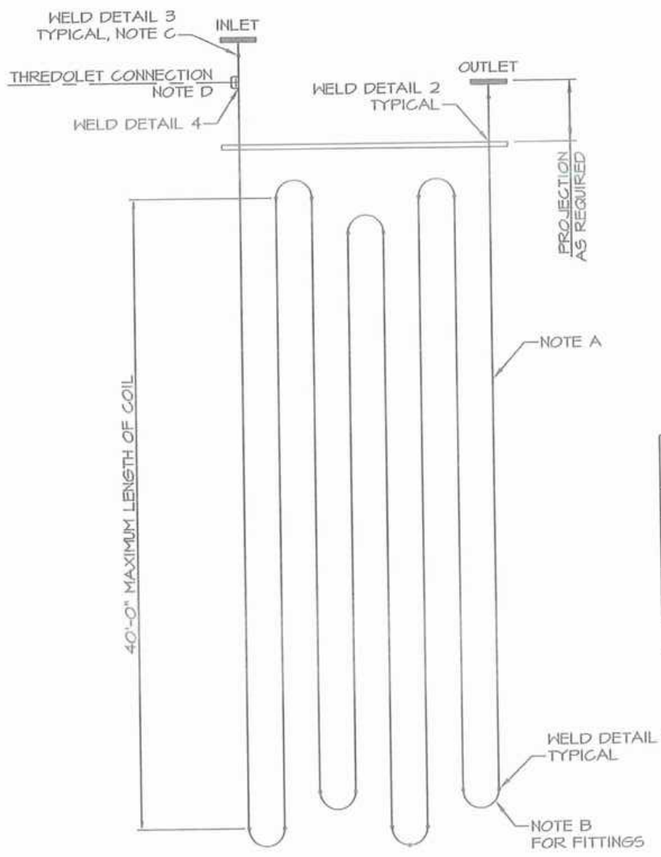

TYPICAL COIL SCHEMATIC

20 PASSES MAXIMUM

SEPARATION CHART (NOTE D)			
SIZE	1/2" TOL	3/4" TOL	1" TOL
MAXIMUM OPENING	0.840" CUT-OUT	1.050" CUT-OUT	1.050" CUT-OUT
1/2" TOL	5 1/2"		
3/4" TOL	6"	6 1/2"	
1" TOL	6 3/4"	7 1/4"	7 7/8"

STANDARD TOLERANCES
FABRICATION:
GENERAL DEVIATION: ± 1/8"
OVERALL LENGTH: ± 1/4"
ANGULAR: ± 1°
WELD PREPARATION:
LAND: 1/16" ± 1/32"
ROOT GAP: 1/8" ± 1/16"
ANGULAR: ± 15°

DESIGN NOTES

DESIGN & FABRICATE TO: ASME B31.3, 2012 EDITION
MAXIMUM ALLOWABLE WORKING PRESSURE (MAWP): SEE CHART
DESIGN TEMPERATURE: 200° F
MINIMUM DESIGN METAL TEMPERATURE (MDMT): -20° F AT MAWP
IMPACT TESTS: EXEMPT PER TABLE 323.2.2 - COLUMN A
RADIOGRAPHY: RANDOM (M341.4b) 20% OF TOTAL WELDS
PWHT IS NOT REQUIRED PER TABLE 331.1.1. POST WELD HEAT TREATMENT MAY BE ADDED PROVIDED A PWHT WELDING PROCEDURE IS USED. TIME AND TEMPERATURE: 1150° F ±50° F FOR ONE HOUR MINIMUM
HYDROSTATIC TEST PRESSURE: SEE CHART FOR PRESSURE
CORROSION ALLOWANCE: SEE CHART

GENERAL NOTES

1. QUALITY CONTROL PROGRAM NUMBER: REGISTERED WITH ABSA
2. WELDING PROCEDURE REGISTRATION NUMBER: REGISTERED WITH ABSA
3. WELDING PROCEDURE SPECIFICATION NUMBER: QUALIFIED TO .600" AND -20° F
4. SERVICE: NORMAL FLUID AND CATEGORY M
5. HEATING SURFACE AREA: 753 FT2 MAXIMUM
6. CAPACITY: 42.2 FT3 MAXIMUM
7. SURFACE PREPARATION: HAND TOOL CLEAN (MIN)
8. PRIME AND PAINT: AS PER CLIENT SPECIFICATIONS
9. ALL BOLT HOLES TO STRADDLE CENTERLINES.
10. COIL TO BE CLEANED WITH ALL OPENINGS PLUGGED FOR SHIPMENT.
11. USE WELDING PROCEDURE (TBA) FOR ALL TACK WELDS.
12. CRN DRAWING: 4244-3 REV 1
    CRN CALCULATIONS: 4244-3-R1

FABRICATION NOTES

A. FOR SCH STD, XH AND 160, ONLY THE FOLLOWING MATERIALS SHALL BE USED FOR FABRICATION:
PIPE (B36.10): SA-106-B, SA-333-GR 6
FORGINGS (B16.5, B16.11): SA-105, SA-105N, SA-350-LF2 CLASS 1
WELD FITTINGS (B16.9, B16.28): SA-234-WPB, SA-420-WPL6

FOR SCH XXH, ONLY THE FOLLOWING MATERIALS SHALL BE USED FOR FABRICATION:
PIPE (B36.10): SA-333-GR 6
FORGINGS (B16.5, B16.11): SA-350-LF2 CLASS 1
WELD FITTINGS (B16.9, B16.28): SA-420-WPL6

B. LONG OR SHORT RADIUS FITTINGS (90° ELBOWS, 180° BENDS) MAY BE USED, PROVIDED THEY ARE THE SAME SCHEDULE AS THE PIPE.

C. RFWN OR RTJWN FLANGES MAY BE USED AND THEY MAY BE INCREASED TO A HIGHER CLASS.

D. MAY USE 1/2", 3/4" OR 1" CLASS 6000 THREDOLET CONNECTIONS LOCATED RADIALLY ANYWHERE ON THE PIPE COIL. THE MAXIMUM CUT-OUT DIAMETER AND MINIMUM DISTANCE APART IS LISTED IN THE SEPARATION CHART.

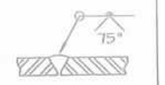

WELD DETAIL 1
WPS: TBA

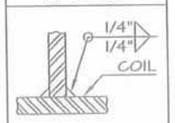

WELD DETAIL 2
WPS: TBA

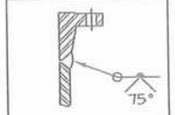

WELD DETAIL 3
WPS: TBA

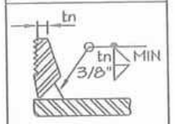

WELD DETAIL 4
WPS: TBA

CRN: PENDING

ABSA
SAFETY CODES ACT - PROVINCE OF ALBERTA
REG. No W3264.2
DWG No 4244-3 Rev. 1
MAWP kPa | Design Temp °C
3" Heater Coil | -29/93
MAWP PER TABLE
ACCEPTED
NOV 06 2013
Date
Signed
ZANA RADISAVLJEVIC, P.E.
DESIGN ENGINEER

CANADIAN REGISTRATION NUMBER

NO.	DATE	REVISION	BY	APP
1	13-10-04	ISSUED FOR REGISTRATION	PJD...	MR
0	13-10-04	ISSUED FOR APPROVAL	PJD...	MR

ENLYN CORP
6511 - 67 STREET
RED DEER, AB T4P 1A3
TELEPHONE: (403) 346-2855 FAX: (403) 346-2594

REF DWG:	N/A
DATE:	13-08-05
BDD NO.:	4243
JOB NO.:	
SCALE:	NTS
DRAWN BY:	PJD...
CHECKED BY:	MR
APP BY:	

3" HEATER COIL
DESIGN DATA AND MAWP
AT -20° F / 200° F

DWG NO.: 4244-3
REV. 1

THIS DRAWING IS THE PROPERTY OF ENLYN CORP. IT MAY NOT BE REPRODUCED WITHOUT THE PERMISSION OF ENLYN CORP.

BLUE DIAMOND DESIGN LTD. 220 HART ROAD, VICTORIA, BC V9C 1A1 TELEPHONE: (250) 391-4612 eMAIL: dade@shaw.ca

the pressure equipment safety authority

9410 - 20 Ave N.W.
Edmonton, Alberta, Canada T6N 0A4
Tel: (780) 437-9100 / Fax: (780) 437-7787

November 06, 2013

Attention: Mark Rajher
ENLYN CORP
6511 67 STREET
RED DEER, AB

The design submission, tracking number 2013-07513, originally received on October 08, 2013 was surveyed and accepted for registration as follows:

CRN : W3264.2 **Accepted on:** November 06, 2013

Reg Type: New Design

Drawing No. : 4244-3 Rev 1

Design registered in the name of : ENLYN CORP

Description	MAWP	Design Temperature	MDMT
3" HEATER COIL		93 °C	-29 °C
MAWP PER TABLE ON DWG.			

An invoice covering survey and registration fees will be forwarded from our Revenue Accounts.

Enclosed are stamped prints for your reference.

Sincerely,

Zana Radisavljevic

RADISAVLJEVIC, ZANA, R.E.T.

505 - 6th Street, Suite 200
New Westminster, BC V3L 0E1

Toll Free: 1-866-566-SAFE
Fax: (778) 396 - 2064
www.safetyauthority.ca

ENLYN CORP.
6511 67 STREET
RED DEER AB T4P 1A3
CANADA

Date: February 20, 2014
Account #: 58817
Journal #: 59037
Our File #: 5486393

Attn: MARK RAJHER

Re: Application for Design Registration

The design, as detailed in your, Dwg: 4244-3, for a Pressure Vessel is accepted for registration as follows:

Registered To: ENLYN CORP. **CRN:** W3264.21

MDMT: -20 deg F **MAWT:** 200 deg F **MAWP:** 4031 psig

Drawing #: 4244-3 **Drawing Revision:** 1

Conditions Of Registration:

Registration of a 3" Heater Coil. MAWP per table on drawing.

This design was registered based on a technical review performed by the province of initial registration in accordance with the Association of Chief Inspectors policy on reciprocal recognition of design review.

Contact me if you have any questions. The invoice for registration will be forwarded under separate cover.

SHARON PETERS
(778) 396-2027
Sharon.Peters@safetyauthority.ca
Design Administration

cc:

Technical
Safety Authority
of Saskatchewan

2202 2nd Avenue
Regina, SK S4R 1K3
Canada

306-787-1443
info@tsask.ca

www.tsask.ca

REGISTRATION APPROVAL

27-Feb-14

Enlyn Corp.
6511 67th Street
Red Deer, AB
T4P 1A3

Our File 48212 [0V]

ATTENTION : Mark Rajher

With reference to your submission respecting the registration of the item below, for legal use in the province, please note we have surveyed, approved and registered this design as noted.

MANUFACTURER :	Enlyn Corp.	
ITEM :	DRAWING NUMBER :	CRN :
3" Heater Coil	4244-3 Rev. 1	W3264.23

We wish to point out that every vessel must be constructed strictly in accordance with the registered design.

In addition to stamping every vessel with the registration number given above and as required in CSA Code B51, a Manufacturer's Data Report must be forwarded to this office immediately at the time a vessel is shipped. Such forms may be obtained upon request.

Sincerely,

Athan Syrgiannis, Engineer-in-Training
Codes and Standards Compliance

REMARKS: CRN registered under reciprocal agreement. MAWP per table on drawing.

ENLYN

DESIGN CALC REVISION SHEET

EXHIBIT 8.1

JOB: 14-561-01 **CODE EDITION:** ASME B31.3 2012

ADDENA:

CALCULATION PACKAGE REVISION LEVEL: 0

Calulation Description	Applicable		Pages	Rev Level
	Yes	No		
Primary Membrane Stress Calcs. (Computer Design Pgm.)	X		2, 3	1
Lifting Lug Calculations		X		
Horizontal Vessel Saddle Calculations		X		
Vertical Vessel Skirt Calculations		X		
Other UG-22 Specified Loadings		X		
Vessel Impact Testing Exemption Summary		X		

DESIGN CALCULATIONS INDEX

DESIGN CALCULATIONS REVISION CONTROL AND APPROVAL

Drawing No. & Rev. Level	Calc. Package Rev. Level	Revised Calcs. Required	Approval	Date
~ 4244-03-01	1	NO		
14-561-01-C Rev 2	1	NO		

Whenever new drawings are issued that pertain to the calculation package or whenever drawings are revised, the current calculations shall be verified and approved as applicable or revised as necessary and approved.

Date:	13-10-04	Rev: 1
Client:	Enlyn Corp.	
Drawing Number:	4244-3	
Description:	3" Heater Coil	

Heater Coil Design Calculations

Calculation Revision No.	1	13-10-04	Issued For Registration	PJD...
Calculation Revision No.	0	13-10-04	Issued For Review	PJD...

Design Drawing No.	Drawing Rev No.	Design Calculation No.	Comments
4244-3	0	0	Calculations created based on design information provided.
4244-3	1	1	Calculations reviewed and completed for submission to ABSA.

Engineering Manager: _____ Date: Jan 18/14

Quality Control Manager: _____ Date: Jan 18/14

Authorized Inspector: _____ Date: _____

Approved by Designer: _____ Date: 13-10-04

Blue Diamond Design Ltd.
220 Hart Road
Victoria, BC V9C 1A1
Phone: (250) 391-4612
eMail: dade@shaw.ca

Date:	13-10-04	Rev: 1
Client:	**Enlyn Corp.**	
Drawing Number:	4244-3	
Description:	**3" Heater Coil**	

Maximum Allowable Working Pressure Calculation

Design Data

Minimum Design Temperature		-20 °F	Impact Tests Exempt per 323.2.2 - Column A
Maximum Design Temperature		200 °F	
Outside Diameter	D	3.5 in	
Joint Efficiency	E	1.00	Random per M341.4b (20% of Total Welds)
Pipe Material Stress Value	S	20,000 psi	SA-106-B Pipe, SA-333-Gr 6

MAWP = (2SEt / D - 0.8t)

3" Sch Std

			Corrosion Allowance			
			0	1/16	1/8	
Pipe Nominal Thickness		0.2160 in	**2257.53**	**1488.76**	**742.29**	psig
Pipe Minimum Thickness	t	0.1890 in	3,386	2,232	1,113	Hydro

3" Sch XH

			Corrosion Allowance			
			0	1/16	1/8	
Pipe Nominal Thickness		0.3000 in	**3191.49**	**2395.21**	**1622.42**	psig
Pipe Minimum Thickness	t	0.2625 in	4,787	3,593	2,433	Hydro

3" Sch 160

			Corrosion Allowance			
			0	1/16	1/8	
Pipe Nominal Thickness		0.4370 in	**4788.52**	**3944.08**	**3125.28**	psig
Pipe Minimum Thickness	t	0.3824 in	7,182	5,916	4,688	Hydro

3" Sch XXH

			Corrosion Allowance			
			0	1/16	1/8	
Pipe Nominal Thickness		0.6000 in	**6818.18**	**5910.54**	**5031.45**	psig
Pipe Minimum Thickness	t	0.5250 in	10,227	8,865	7,547	Hydro

Date: 13-10-04
Client: Enlyn Corp.
Drawing Number: 4244-3
Description: Class 6000 Thredolet MAWP Calculations

Rev: 1

All calculations are based on the following formula:

MAWP = S E t / (R + 0.6 t)

Where:
- S = Stress Value at the Service Temperature
- E = Joint Efficiency (1.0)
- R = Inside Radius
- t = Corroded wall thickness

Class 6000 Thredolet Design Data

Nominal Diameter: 1/2 in
Minimum Outside Diameter: 1.5625 in
Maximum Inside Diameter: 0.8400 in
Nominal Wall Thickness: 0.3613 in
Dimension 'C' : 1.1250 in
Material: SA-105/105N/350-LF2-1

Service Temp - F	Stress Value	CA 0	CA 1/16	CA 1/8
200	20,000	9271	7429	5697

Class 6000 Thredolet Design Data

Nominal Diameter: 3/4 in
Minimum Outside Diameter: 1.8125 in
Maximum Inside Diameter: 1.0500 in
Nominal Wall Thickness: 0.3813 in
Dimension 'C' : 1.2500 in
Material: SA-105/105N/350-LF2-1

Service Temp - F	Stress Value	CA 0	CA 1/16	CA 1/8
200	20,000	8931	7254	5670

Nominal Diameter: 1 in
Minimum Outside Diameter: 2.2500 in
Maximum Inside Diameter: 1.3150 in
Nominal Wall Thickness: 0.4675 in
Dimension 'C' : 1.6875 in
Material: SA-105/105N/350-LF2-1

Service Temp - F	Stress Value	CA 0	CA 1/16	CA 1/8
200	20,000	8316	7048	5833

Date:	13-10-04	Rev: 1
Client:	Enlyn Corp.	
Drawing Number:	4244-3	
Description:	3" Heater Coil	

Maximum Allowable Working Pressure Calculation for Flanges

		MAWP for Flange Class					
	Temp °F	150	300	600	900	1500	2500
Maximum Design Temperature	200	260	680	1360	2035	3395	5655

Date: 13-10-04 Rev: 1
Client: Enlyn Corp.
Drawing Number: 4244-3
Description: 3" Heater Coil

Separation Chart Calculations

Corrosion Allowance = 0.125 in

Connection Size				1/2" NPT	3/4" NPT	1" NPT
Opening or Neck Diameter				0.84	1.05	1.315
Neck Thickness				0	0	0
Corroded Developed Opening Diameter				1.090	1.300	1.565
Size	OD	Thk				
1/2" NPT	0.84	0	1.090	5.4500		
3/4" NPT	1.05	0	1.300	5.9750	6.5000	
1" NPT	1.315	0	1.565	6.6375	7.1625	7.8250

ITEM NO	PART NUMBER	QTY	Length
1	3" 1500# S160 BTWN 24-105HN	1	
2	TUBE SHEET 3/8" PLATE SA-36 / 44A	2	
3	NAME PLATE	1	

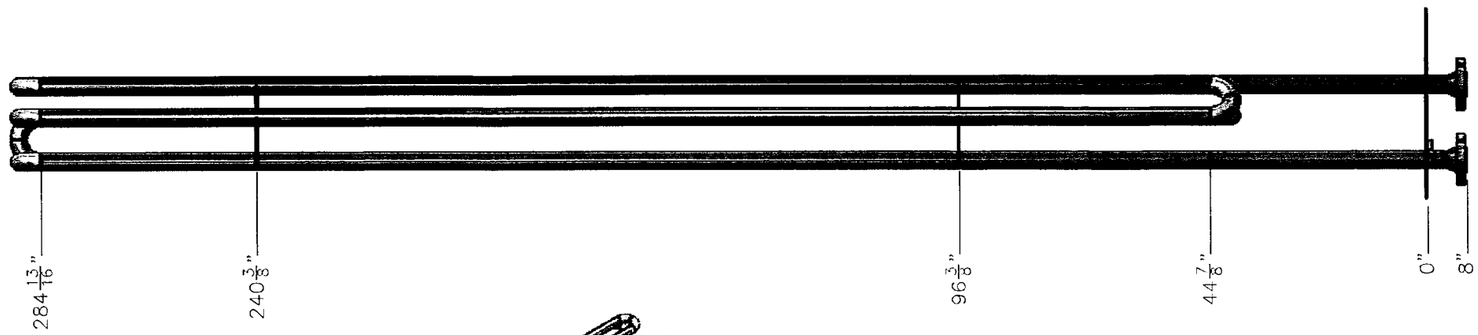

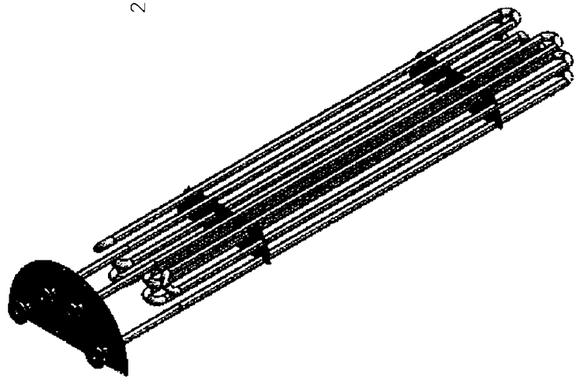

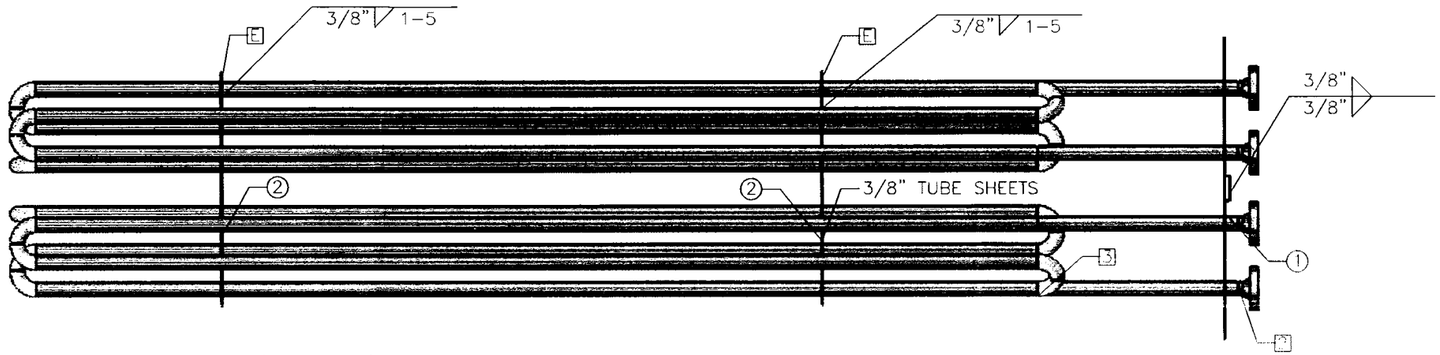

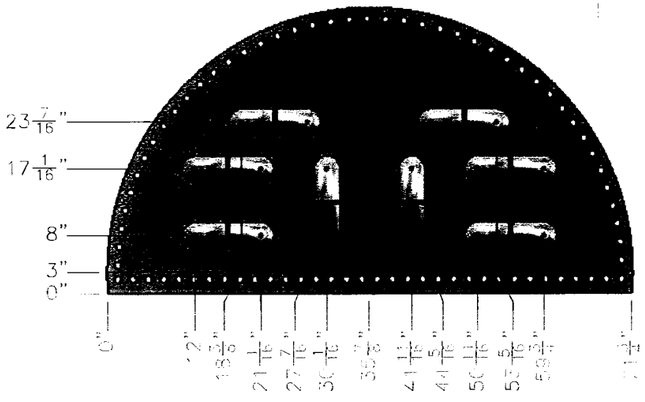

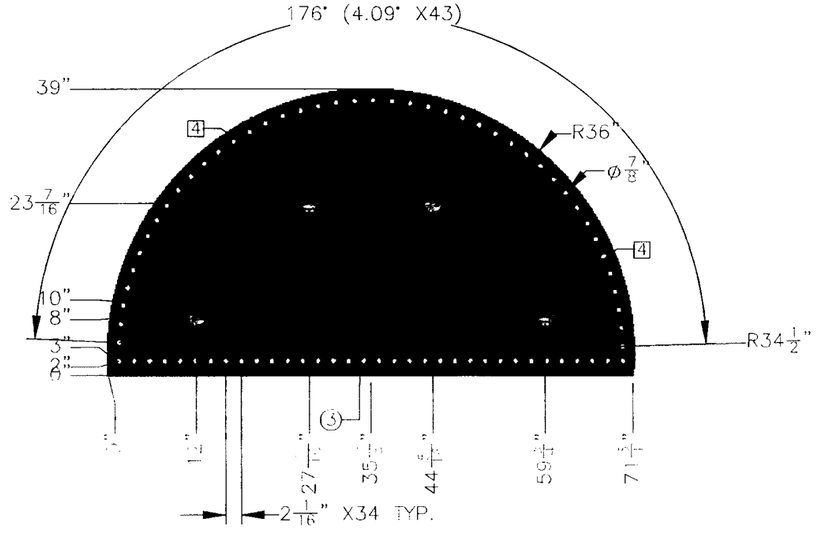

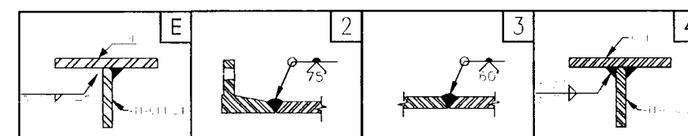

EC-2 REV.1	EC-2 REV.1	EC-2 REV.1	EC-2 REV.1

DESIGN DATA

CONSTRUCTION AS PER ASME B31.3 2012 EDITION NORMAL FLUID SERVICE

SERIAL NO:	1456101	MAWP:	3125 PSIG
CRN:	W3264.213	HYDROTEST:	4688 PSIG
DESIGN TEMP:	200°F	C/A:	1/8"
MDMT:	-20°F	YEAR BUILT:	2014
RADIOGRAPHY:	100%	HYDROTEST MED:	H20
PREHEAT:	50°F		
PWHT PER UCS-56:	1150°F FOR 60MIN		
IMPACT TEST:	EXEMPT PER TABLE 323.2.2 COLUMN A		
CAPACITY:		WEIGHT (EMPTY):	
Q.C. PROGRAM:	AQP-1543	WELD PROC. REG:	WP 3221.2
INT. SANDBLAST:	N/A	INTERNAL PAINT:	N/A
EXT. SANDBLAST:	N/A	EXTERNAL PAINT:	N/A
REG'D CRN DWG NO:	4244-3 Rev 1	REG'D CALC NO:	4244-3 Rev 1

GENERAL NOTES:
1. ALL DIMENSIONS ARE IN INCHES UNLESS OTHERWISE NOTED.
2. SANDBLAST & PAINT ENAMEL GREY.
3. GRIND ALL SHARP EDGES.
4. FINAL INSPECTION REQUIRED.

REV	DESCRIPTION	DWN BY	DATE
2	CHANGED UNITS TO INCHES	EL	1/6/15
1	CHANGED COIL/DETAILS	EL	12/24/14
0	ISSUED FOR REVIEW	EL	12/17/14

REVISIONS

ENLYN

2MM BTU/HR LINEHEATER

COIL DRAWING

	BY	DATE
DWN	E.L.	12/17/14
CHK		
ENG APP		
QC APP		

Customer: NuVista Energy

DWG NO:	REV	SHT	Shop Order:
14-561-01-C	2	3/11	14-561-01

THIS DRAWING IS THE PROPERTY OF ENLYN PROCESS SYSTEMS AND IS NOT TO BE USED FOR ANY PURPOSE OTHER THAN FOR WHICH IT IS INTENDED

THIS DRAWING IS THE PROPERTY OF ENLYN PROCESS SYSTEMS AND IS NOT TO BE USED FOR ANY PURPOSE OTHER THAN FOR WHICH IT IS INTENDED

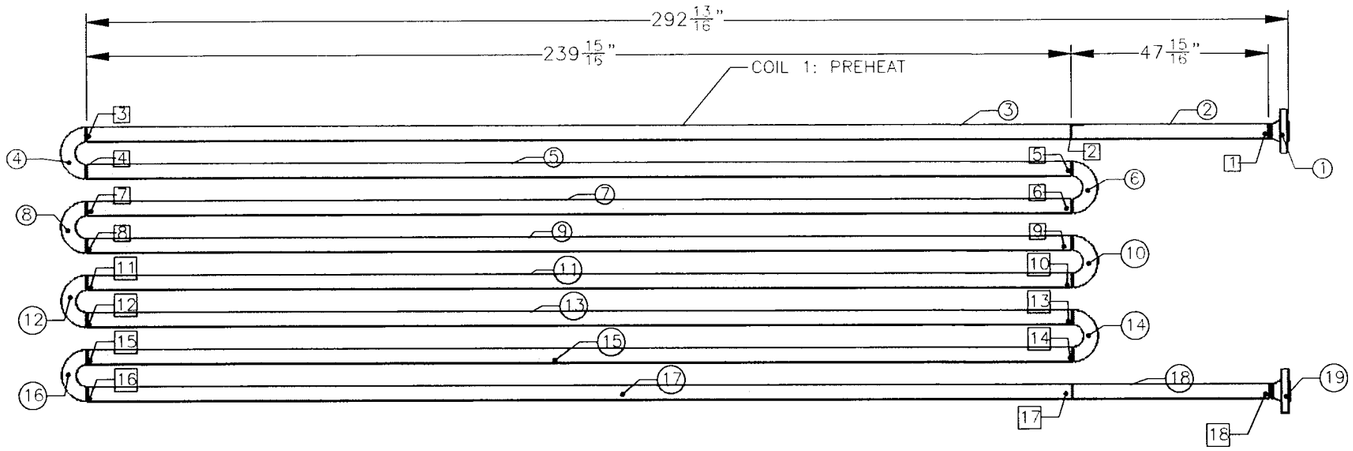

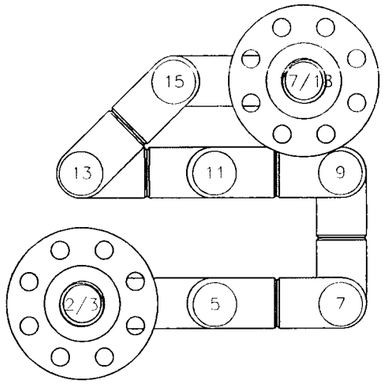

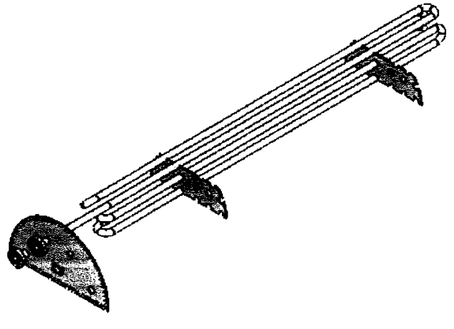

ITEM NO	PART NUMBER	QTY	Length	Heat Number
1	3" 1500# S160 RTJWN SA-105-N	1		4573180
2	3" S160 PIPE SA-106-B	1	48"	145045
3	3" S160 PIPE SA-106-B	1	20"	145045
4	3" S160 180° LR ELBOW SA-234-WPB	1		14E00057
5	3" S160 PIPE SA-106-B	1	20"	145045
6	3" S160 180° LR ELBOW SA-234-WPB	1		14E00057
7	3" S160 PIPE SA-106-B	1	20"	145045
8	3" S160 180° LR ELBOW SA-234-WPB	1		14E00057
9	3" S160 PIPE SA-106-B	1	20"	145045
10	3" S160 180° LR ELBOW SA-234-WPB	1		14E00057
11	3" S160 PIPE SA-106-B	1	20"	145045
12	3" S160 180° LR ELBOW SA-234-WPB	1		14E00057
13	3" S160 PIPE SA-106-B	1	20"	145045
14	3" S160 180° LR ELBOW SA-234-WPB	1		14E00057
15	3" S160 PIPE SA-106-B	1	20"	145045
16	3" S160 180° LR ELBOW SA-234-WPB	1		14E00057
17	3" S160 PIPE SA-106-B	1	20"	145045
18	3" S160 PIPE SA-106-B	1	48"	145045
19	3" 1500# S160 RTJWN SA-105-N	1		4573180

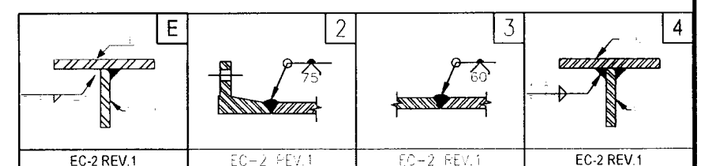

EC-2 REV.1 | EC-2 REV.1 | EC-2 REV.1 | EC-2 REV.1

Weld Identifier	Welder ID	X-Ray Number
1	L	X-33
2	O	X-28
3	O	X-26
4	L	X-14
5	L	[illegible]
6	[illegible]	[illegible]
7	L	[illegible]
8	[illegible]	[illegible]
9	L	[illegible]
10	O	X-7
11	L	X-16
12	L	X-5
13	L	X-22
14	O	X-3
15	O	X-15
16	O	X-1
17	O	X-24
18	L	X-34

GENERAL NOTES:
1. ALL DIMENSIONS ARE IN INCHES UNLESS OTHERWISE NOTED
2. SANDBLAST AND PAINT
3. GRIND ALL SHARP EDGES
4. FINAL INSPECTION REQUIRED

REV	DESCRIPTION	DWN BY	DATE
2	CHANGED UNITS TO INCHES	EL	1/6/15
1	CHANGED COIL/DETAILS	EL	12/24/14
3	AS BUILT	EL	5/5/15

REVISIONS

DESIGN DATA

CONSTRUCTION AS PER ASME B31.3 2012 EDITION NORMAL FLUID SERVICE

SERIAL NO:	1456101	MAWP:	3125 PSIG
CRN:	W3264.213	HYDROTEST:	4688 PSIG
DESIGN TEMP:	200°F	C/A:	1/8"
MDMT:	-20°F	YEAR BUILT:	2014
RADIOGRAPHY:	100%	HYDROTEST MED:	H20
PREHEAT:	50°F		
PWHT PER UCS-56:	1150°F FOR 60MIN		
IMPACT TEST:	EXEMPT PER TABLE 323.2.2 COLUMN A		
CAPACITY:		WEIGHT (EMPTY):	
Q.C. PROGRAM:	AQP-1543	WELD PROC. REG:	WP 3221.2
INT. SANDBLAST:	N/A	INTERNAL PAINT:	N/A
EXT. SANDBLAST:	N/A	EXTERNAL PAINT:	N/A
REG'D CRN DWG NO:	4244-3 Rev 1	REG'D CALC NO:	4244-3 Rev 1

ENLYN

2MM BTU/HR LINEHEATER

COIL DRAWING

	BY	DATE
DWN	E.L.	12/17/14
CHK		
ENG APP		
QC APP		

Customer: NuVista Energy

DWG NO:	REV	SHT	Shop Order:
14-561-01-0	3	4/11	14-561-01

THIS DRAWING IS THE PROPERTY OF ENLYN PROCESS SYSTEMS AND IS NOT TO BE USED FOR ANY PURPOSE OTHER THAN FOR WHICH IT IS INTENDED

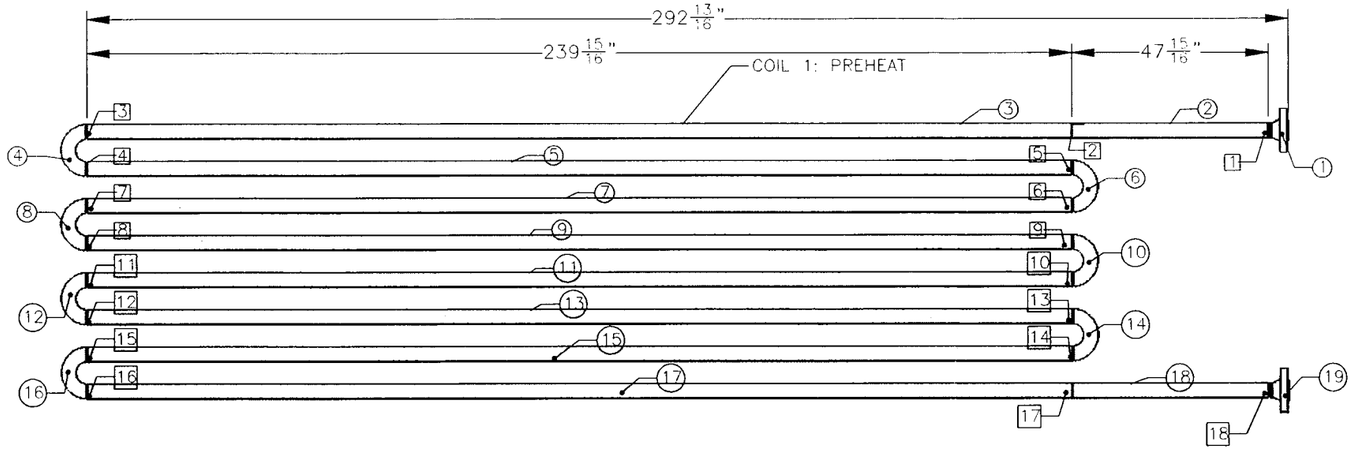

ITEM NO	PART NUMBER	QTY	Length	Heat Number
1	3" 1500# S160 RTJ WN SA-105-N	1		4573180
2	3" S160 PIPE SA-106-B	1	48"	145045
3	3" S160 PIPE SA-106-B	1	20"	145045
4	3" S160 180° LR ELBOW SA-234-WPB	1		14E00057
5	3" S160 PIPE SA-106-B	1	20"	145045
6	3" S160 180° LR ELBOW SA-234-WPB	1		14E00057
7	3" S160 PIPE SA-106-B	1	20"	145045
8	3" S160 180° LR ELBOW SA-234-WPB	1		14E00057
9	3" S160 PIPE SA-106-B	1	20"	145045
10	3" S160 180° LR ELBOW SA-234-WPB	1		14E00057
11	3" S160 PIPE SA-106-B	1	20"	145045
12	3" S160 180° LR ELBOW SA-234-WPB	1		14E00057
13	3" S160 PIPE SA-106-B	1	20"	145045
14	3" S160 180° LR ELBOW SA-234-WPB	1		14E00057
15	3" S160 PIPE SA-106-B	1	20"	145045
16	3" S160 180° LR ELBOW SA-234-WPB	1		14E00057
17	3" S160 PIPE SA-106-B	1	20"	145045
18	3" S160 PIPE SA-106-B	1	48"	145045
19	3" 1500# S160 RTJ WN SA-105-N	1		4573180

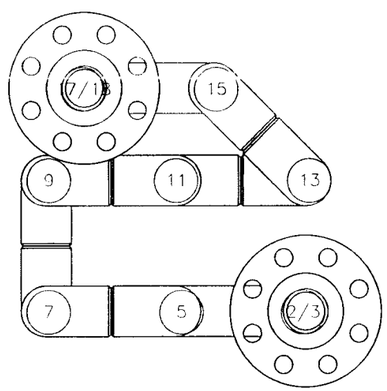

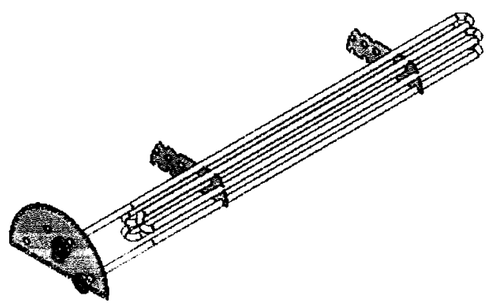

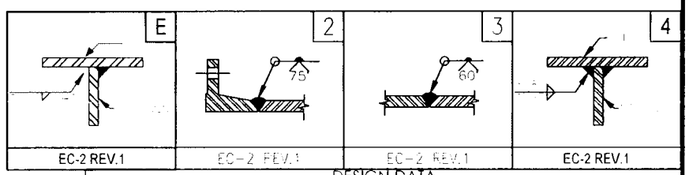

Weld Identifier	Weiser ID	X-Ray Number
1	Q	X-32
2	L	X-20R
3	Q	X-28
4	Q	X-13
[illegible]		
[illegible]		
[illegible]		
[illegible]		
[illegible]		
10	Q	X-8
11	L	X-17R
12	Q	X-5
13	L	X-31
14	Q	X-4
15	Q	X-16
16	Q	X-2
17	L	X-1R
18	L	X-31

DESIGN DATA			
CONSTRUCTION AS PER ASME B31.3 2012 EDITION NORMAL FLUID SERVICE			
SERIAL NO:	1456101	MAWP:	3125 PSIG
CRN:	W3264.213	HYDROTEST:	4688 PSIG
DESIGN TEMP:	200°F	C/A:	1/8"
MDMT:	-20°F	YEAR BUILT:	2014
RADIOGRAPHY:	100%	HYDROTEST MED:	H20
PREHEAT:	50°F		
PWHT PER UCS-56:	1150°F FOR 60MIN		
IMPACT TEST:	EXEMPT PER TABLE 323.2.2 COLUMN A		
CAPACITY:		WEIGHT (EMPTY):	
Q.C. PROGRAM:	AQP-1543	WELD PROC. REG:	WP 3221.2
INT. SANDBLAST:	N/A	INTERNAL PAINT:	N/A
EXT. SANDBLAST:	N/A	EXTERNAL PAINT:	N/A
REG'D CRN DWG NO:	4244-3 Rev 1	REG'D CALC NO:	4244-3 Rev 1

GENERAL NOTES:
1. ALL DIMENTIONS ARE IN INCHES UNLESS OTHERWISE NOTED
2. SANDBLAST AND PAINT
3. GRIND ALL SHARP EDGES.
4. FINAL INSPECTION REQUIRED

REV	DESCRIPTION	DWN BY	DATE
2	CHANGED UNITS TO INCHES	EL	1/6/15
1	CHANGED COIL DETAILS	EL	12/24 14
3	AS BUILT	EL	5/5/15

REVISIONS

ENLYN

2MM BTU/HR LINEHEATER
COIL DRAWING

	BY	DATE
DWN	E.L.	12/17/14
CHK		
ENS APP		
QC APP		

Customer: NuVista Energy

DWG NO:	REV	SHT	Shop Order:
14-561-01-C	3	5/11	14-561-01

THIS DRAWING IS THE PROPERTY OF ENLYN PROCESS SYSTEMS AND IS NOT TO BE USED FOR ANY PURPOSE OTHER THAN FOR WHICH IT IS INTENDED

ITEM NO.	Part Number	QTY.	Weight	Heat Number
1	COIL SIDE END PLATE 3/8" PLATE SA-36 / 44W	1		
2	TUBE SIDE END PLATE 3/8" PLATE SA-36 / 44W	1		
3	TUBE SHEET 3/8" PLATE SA-36 / 44W	2		

ONE HOLED

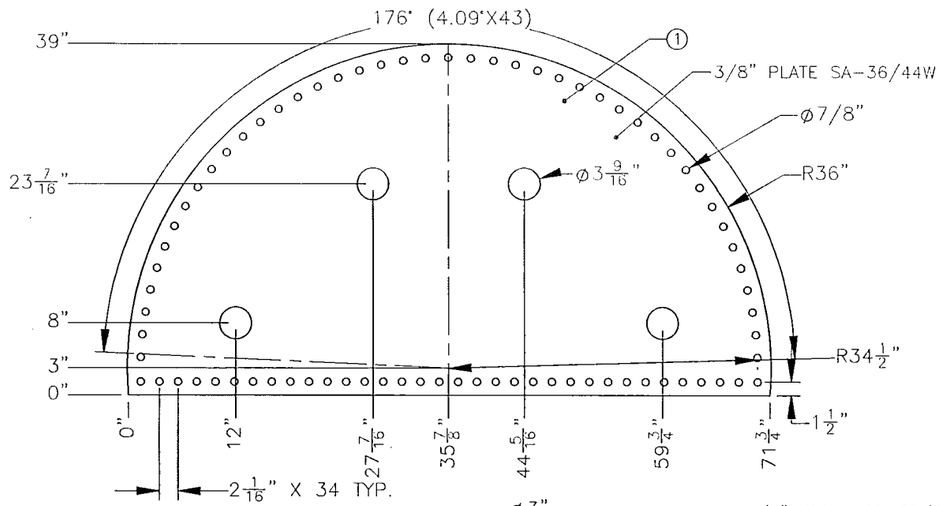

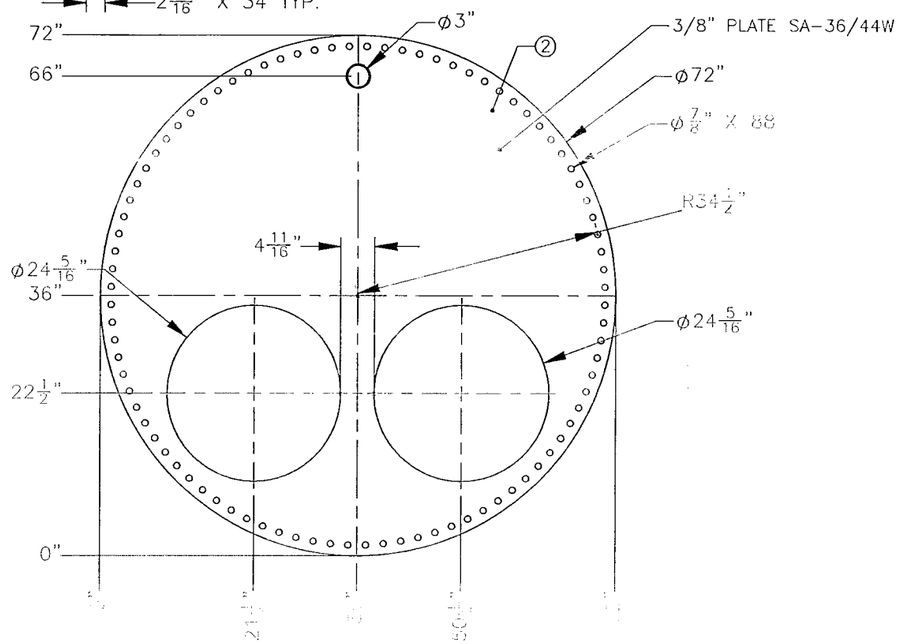

BURNER SIDE END PLATE

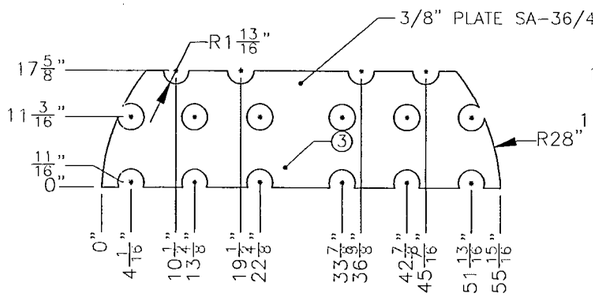

TUBE SHEET #1

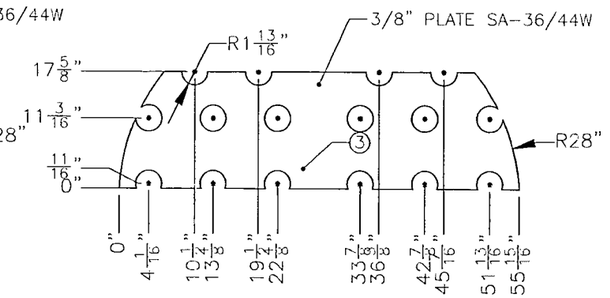

TUBE SHEET #2

ISSUED FOR CONSTRUCTION
JAN 7 '15

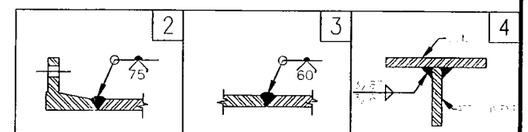

DESIGN DATA			
CONSTRUCTION AS PER ASME B31.3 2012 EDITION NORMAL FLUID SERVICE			
SERIAL NO:	1456101	MAWP:	3125 PSIG
CRN:	W3264.213	HYDROTEST:	4688 PSIG
DESIGN TEMP:	200°F	C/A:	1/8"
MDMT:	-20°F	YEAR BUILT:	2014
RADIOGRAPHY:	100%	HYDROTEST MED:	H20
PREHEAT:	50°F		
PWHT PER UCS-56:	1150°F FOR 60MIN		
IMPACT TEST:	EXEMPT PER TABLE 323.2.2 COLUMN A		
CAPACITY:		WEIGHT (EMPTY):	
Q.C. PROGRAM:	AQP-1543	WELD PROC. REC:	WP 3221.2
INT. SANDBLAST:	N/A	INTERNAL PAINT:	N/A
EXT. SANDBLAST:	N/A	EXTERNAL PAINT:	N/A
REG'D CRN DWG NO:	4244-3 Rev 1	REG'D CALC NO:	4244-3 Rev 1

ENLYN

4MM BTU/HR LINEHEATER

CUT PART DRAWING

	BY	DATE
DWN	E.L.	12/ 7/14
CHK		
ENG APP		
QC APP		

Customer: NuVista Energy

DWG NO:	REV	SHT	Shop Order:
14-561-01-0	2	6/11	14-561-01

GENERAL NOTES:
1. ALL DIMENSIONS ARE IN INCHES UNLESS OTHERWISE NOTED
2. SANDBLAST & PAINT.
3. GRIND ALL SHARP EDGES
4. FINAL INSPECTION REQUIRED

REV	DESCRIPTION	DWN BY	DATE
2	CHANGED UNITS TO INCHES	EL	1/6/15
1	CHANGED COIL/DETAILS	EL	12/24/14
0	ISSUED FOR REVIEW	EL	12/17/14

REVISIONS

ABSA
the pressure equipment safety authority

9410 - 20 Ave N.W.
Edmonton, Alberta, Canada T6N 0A4
Tel: (780) 437-9100 / Fax: (780) 437-7787

October 23, 2013

Attention: Mark Rajher
ENLYN CORP
6511 67 STREET
RED DEER, AB

The welding procedure, tracking number 2013-07602, originally received on October 11, 2013 was surveyed and accepted for registration as follows:

Reg. No. : WP-3221.2 **Accepted on:** October 21, 2013

Reg Type: Revision To accepted Design

Spec. No. : EC-2 REV 1

An invoice covering survey and registration fees will be forwarded from our Revenue Accounts.

Enclosed is a stamped welding procedure for your reference.

Please note the acceptance of this registration does not allow the use of this welding procedure in the construction, modification, on any boiler, pressure vessel, pressure piping system or fitting in Alberta unless the contractor/manufacturer has registered a Quality Control System for such work with ABSA.

Sincerely,

R. Roseberg

ROSEBERG, BOB, P. Eng.

Enlyn Corp.

Welding Procedure Specification

In accordance with

ASME Section VIII, Section IX, B31.1 and B31.3

Welding procedure Specification No.: EC-2-Rev 1

Supporting PQR No. (s): PQR-EC-2-rev 1

Qualified for

Process (es): SMAW/SMAW	Position(s): All/All
Filler Metal F-No.: F-3/F-4	A-No.: A-1/A-1
AWS Classification: E6010/E7018-1	Weld Type(s): Groove, Fillet, weld Buildup
Base metal: P-1	To: P-1
Typical Materials: This procedure is qualified for all P-1 materials as specified in table QW-422 of ASME Section IX for applications where proven notch toughness properties are not required.	
Diameter Range: All diameters	Condition(s): Post weld Heat Treat
	Normal size
Thickness Range: ASME Section VIII	0.188" to 8.000"
ASME Section IX	0.188" to 8.000"
ASME B31.1/B31.3	0.188" to 8.000"

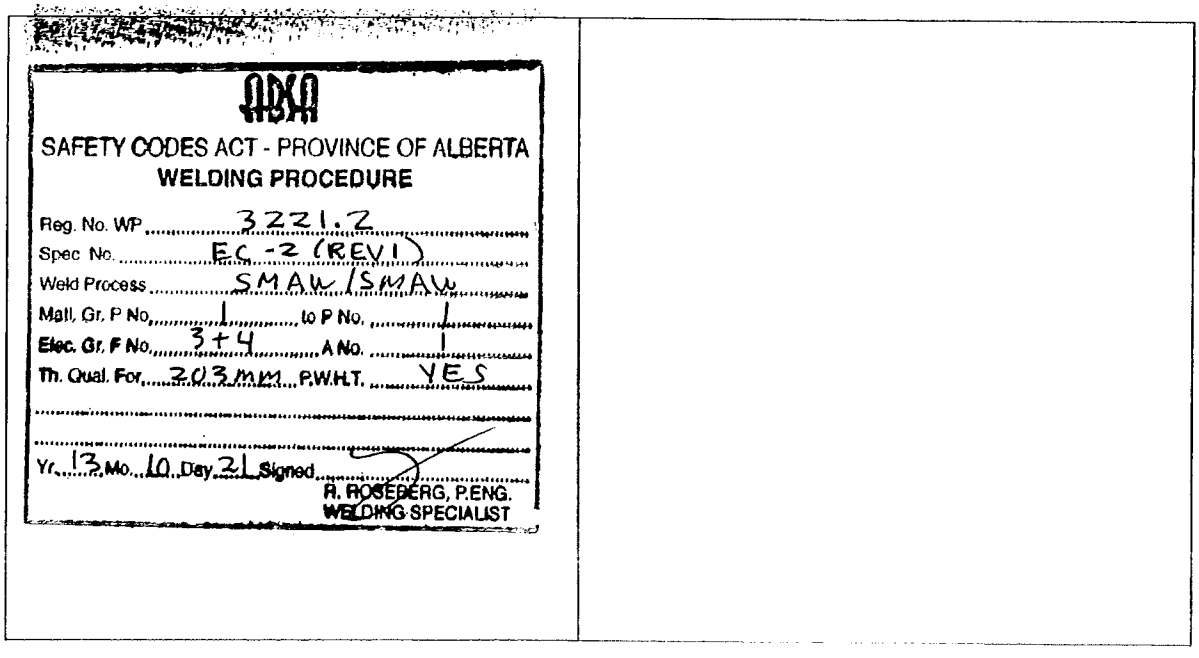

SAFETY CODES ACT - PROVINCE OF ALBERTA
WELDING PROCEDURE

Reg. No. WP 3221.2
Spec No. EC-2 (REV 1)
Weld Process SMAW / SMAW
Matl. Gr. P No. 1 to P No. 1
Elec. Gr. F No. 3+4 A No. 1
Th. Qual. For 203 MM P.W.H.T. YES

Yr. 13 Mo. 10 Day 21 Signed
R. ROSEBERG, P.ENG.
WELDING SPECIALIST

Welding Procedure Specification (WPS) QW-482

(Section IX, ASME Boiler and pressure vessel Code)

Company Name: Enlyn Corp. By: Mark Rajher

WPS No: EC-2-Rev1 Date: September 9, 2011

Revision No.: Rev1 Revision Date: Sept 17, 2013

Supporting PQR's: PQR-EC-2-Rev1

Welding Process (es): SMAW/SMAW Type(s): Manual/Manual

JOINTS QW-402	Joints Details
Joint Design: Butt, Tee, Lap, Corner, etc. Backing: F-3 filler metal with or without backing F-4 electrodes with backing only. Weld built up with or without fluid backing	All ASME joint designs. Reference construction Drawing for joint details. Where joint details are not specified, refer to typical joint detail sheet provided.
Backing Material (Type): Similar base or weld metal or back welding as required. No Retainers.	

BASE METALS QW-403

P-No.: P-1 Group No.: -------- to P-No.: P-1 Group No.: --------

OR

Spec. type & grade: Not Applicable to Spec. type & grade: Not Applicable

OR

Chem. Analysis & Mech. Prop: Not Applicable to Chem. Analysis & Mech. Prop: Not Applicable

Thickness Range

		Normal Size	
Base Metal: Groove:	Selection VIII	0.188" to 8.000"	Fillet: ALL
	Section IX	0.188" to 8.000"	Fillet: ALL
	B31.1/B31.3	0.188" to 8.000"	Fillet: ALL
Pipe Dia Range: Groove: All			Fillet: ALL

Other: Maximum thickness of any weld layer shall not exceed 0.500"

Reference to relevant construction code is mandatory prior to production welding to determine any supplementary restrictions

Filler Metals QW-404

Process:	SMAW	SMAW
Specification No. (SFA):	5.1	5.1
AWS Classification No.:	E6010	E7018-1
F-No:	F-3	F-4
A-No.:	A-1	A-1
Size of Filler Metal:	3/32",1/8",5/32"	3/32",1/8",5/32", 3/16",7/32", 1 /4"
Weld Metal Thickness- Groove	0.188"max	8.000" max
Fillet:	Unlimited	Unlimited
Weld Buildup:	Unlimited	Unlimited
Electrode –Flux (Class):	Not Applicable	Not Applicable
Flux Trade Name:	Not Applicable	Not Applicable
Alloy Flux:	Not Applicable	Not Applicable
Consumable Insert:	Not Applicable	Not Applicable
Supplement Filler Metals:	Not Applicable	Not Applicable
Product Form:	Covered Electrode	Covered electrode
Other:	Not Applicable	Not Applicable

Welding Procedure Specification (WPS) QW-482

(Section IX, ASME Boiler and pressure vessel Code)

WPS# EC-2-Rev1

POSITIONS QW-405	POST HEAT TRATMENT QW-407
Position(s) of Groove: All Weld Progression: F-3 SMAW Vertical Up or Down F-4 SMAW Vertical Up Position(s) of Fillet: ALL	Temp. Range: See next page Time Range: See next page Heating: See next page Cooling: See next page
PREHEAT QW-406	**GAS QW-408**
Temperature Min.: See Next Page Interpass Temp Max.: See Next Page Interpass Temp Min: See Next Page Preheat Maintenance: Monitor using tempilstiks, Pyrometer or other suitable methods	Shielding Gas(es): Not Applicable Composition: Flow Rate: Gas Backing: Backing Rate:

ELECTRIC CHARACTERISTICS QW-409

Current: F-3 SMAW: Direct-DC	F-4 SMAW: Direct-DC
Polarity:F-3 SMAW: Reverse EP	F-4 SMAW: Reverse EP
Amp(Range): F-3 SMAW: 50-180	F-4 SMAW: 50-360
Volts (Range): F-3 SMAW: 20-32	F-4 SMAW: 18-32
Travel Speed (Range)-ipm: F-3 SMAW: 1-16	F-4 SMAW: 1-22
Tungsten electrode Type & Size: Not Applicable	
Mode of Metal Transfer for GMAW: Not Applicable	
Electrode Wire feed speed range: Not Applicable	
Others: Not Applicable	

TECHNIQUE QW-410

String or Weave Bead: String and weave. Weave size shall be controlled to prevent weld defects.
Orifice or Gas Cup Size: Not Applicable
Initial Cleaning: Base Material must be thoroughly cleaned of all foreign material(Scale, rust, oil, grease, paint, Tar, etc.) at least 1" back on each side of the joint prior to welding. All surfaces to be welded Shall be smooth, uniform and free from notches, slag, fins and burrs.
Interpass cleaning: Perform by wire brush, chipping hammer, power brushing, grinding etc. after each weld layer
Method of back Gouging: Arc air, gouge, grind etc., If required. Grind to clean metal where thermal processes are used.
Contact tube to Work Distance: Not Applicable
Multiple or Single Pass (per side): Single or multiple passes per side.
Multiple or single Electrodes: Single electrodes only
Peening: Peening is not allowed.

TYPICAL WELDING PARAMETERS

	Filler Metal		Current			
Process	AWS Classification	Diameter (in)	Type & Polarity	Amp. Range	Voltage Range	Travel Speed (IPM)
SMAW	E6010	3/32	DC EP	50-100	20-32	1-12
SMAW	E6010	1/8	DC EP	50-150	20-32	2-14
SMAW	E6010	5/32	DC EP	70-180	22-32	4-16
SMAW	E7018-1	3/32	DC EP	50-110	18-24	1-12
SMAW	E7018-1	1/8	DC EP	70-160	19-26	1-16
SMAW	E7018-1	5/32	DC EP	110-220	20-28	1-18
SMAW	E7018-1	3/16	DC EP	160-320	20-30	2-20
SMAW	E7018-1	7/32	DC EP	240-340	20-32	3-22
SMAW	E7018-1	1/4	DC EP	275-360	20-32	4-22
Notes:	Number of weld layers and size of filler metal may vary with thickness of base material and position of weld 1/4" E7018-1 electrodes are limited to flat (1G) position only.					

Reference to relevant construction code is mandatory prior to production welding to determine any supplementary restrictions.

Welding Procedure specification (WPS) QW-482

(Section IX, ASME Boiler and Pressure Vessel Code)

WPS#EC-2 Rev. 1

PREHEAT AND INTERPASS TEMPERATURE MINIMUM AND MAXIMUM
Section VIII: 50°F minimum for all P-1 materials except as listed below: 175°F if the joint thickness exceeds 1.000" and specificed carbon content exceeds 0.30% 200°F if the joint thickness is 1.250" to 1.500"
B31.1: 50°F minimum for all P-1 materials except as listed below:
B31.3: 50°F minimum for all P-1 materials except as listed below: 175°F if the specified minimum tensile strength of the base metal exceeds 71 ksi
Max. Interpass Temp: 650°F for normal service, 550°F when proven notch toughness is required
POST WELD HEAT TREATMENT
Section VIII: 1100°F minimum holding temperature Up to 2" wt: 1 Hour per inch nominal wall thickness, 15 minutes minimum holding time Over 2" wt.: 2 hours plus 15 minutes for each additional inch over 2"
B31.1: 1100°F to 1200°F holding temperature range Up to 2"wt: 1 Hour per inch nominal wall thickness, 15 minutes minimum holding time Over 2"wt: 2 hours plus 15 minutes for each additional inch over 2"
B31.3: 1100°F to 1200°F holding temperature range 1 hour per inch nominal wall thickness, 1 hour minimum holding time
Maximum PWHT Time: Not applicable
PWHT HEATING AND COOLING REQUIREMENTS
Section VIII: Heating: Ambient to 800 °F at moderate rate 800°F to holding temperature at 400°F ÷wt per hr: maximum 400°F per hour Cooling: Holding temperature to 800°F at 500°F ÷ wt per hr: maximum 500°F per hour 800°F to ambient by still air cooling
B31.1:Heating: 600°F to holding temperature at 600°F ÷ 1 /2wt per hr: maximum 600°F per hour Cooling: Holding temperature to 600°F at 600°F ÷ 1 /2wt per hr: maximum 600°F per hour
B31.3:Heating: Heat to holding temperature at moderate rate Cooling: Cool at moderate rate
*Note: Section VIII heating and cooling rates are recommended for most applications

Reference to relevant construction code is mandatory prior to production welding to determine any supplementary restrictions.

Typical Joint Details QW-482

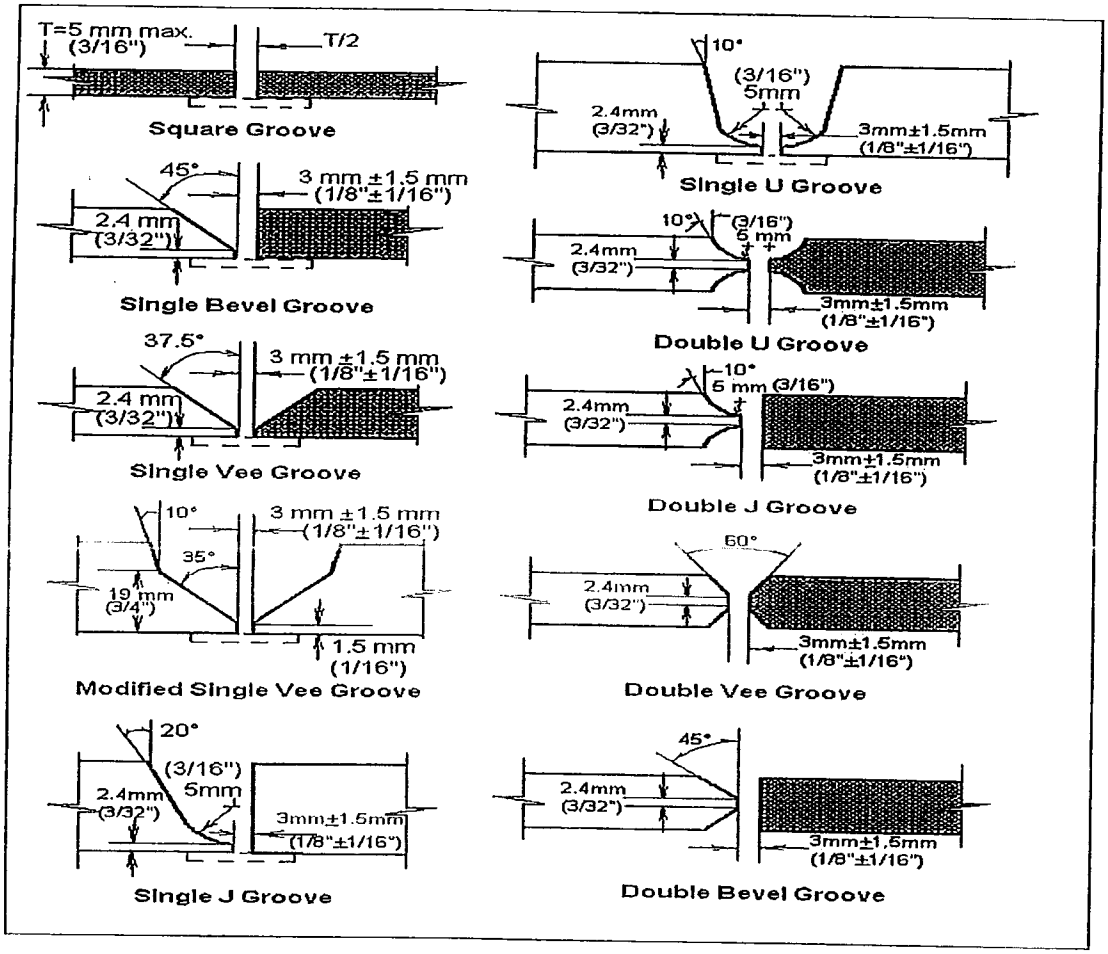

QW-483 PROCEDURE QUALIFICATION RECORD (PQR)

Enlyn Corp.

Procedure Qualification Record No.: EC-2- Rev1 Date: September 18, 2013

Welding Procedure Specification No.: EC-2-Rev1

Welding Process (es): SMAW Type(s): Manual

JOINTS (QW-402)

Type: Butt joint, single vee groove, see next page

Base Metals (QW-403)

Material Spec.: SA 516	Type or Grade: Gr. 70N
P-No: P1 to P-No. P1	Thickness: 38.1mm (1.50 in)
Diameter: N/A	Other: Plate product form

Filler Metals (QW-404)

Specification No. (SFA):	SFA5.1	SFA5.1
AWS No. (Class)	E6010	E7018-1
Filler Metal F-No.	F3	F4
Filler Metal A-No.	A1	A1
Size of Electrode:	See attached sketch	See attached sketch
Deposited Weld Metal Thickness:	2.39mm (0.094 in)	35.7mm (1.406 in.)

Position (QW-405)

Position of Groove: 1G

Weld Progression: N/A

PREHEAT (QW-406)

Preheat Temperature: 66°C (150°F) Interpass Temp (Max.): 315°C (600°F)

POST WELD HEAT TREATMENT (QW-407)

Temperature: 621°C (1150 °F) Time: 180 Minutes

Electrical Characteristics (QW-409)

Current: Direct	Polarity: Reverse, electrode positive
Amp: See Next Page	volts: See next page
Max heat Input: N/A	

TECHNIQUE (QW-410)

String or Weave: Root: String	Remainder: Weave	Travel speed: See next page
Multiple or Single pass per side: Multiple pass from groove side		
Multiple or Single Electrode: Single		

PQR NO. EC-2-Rev.1

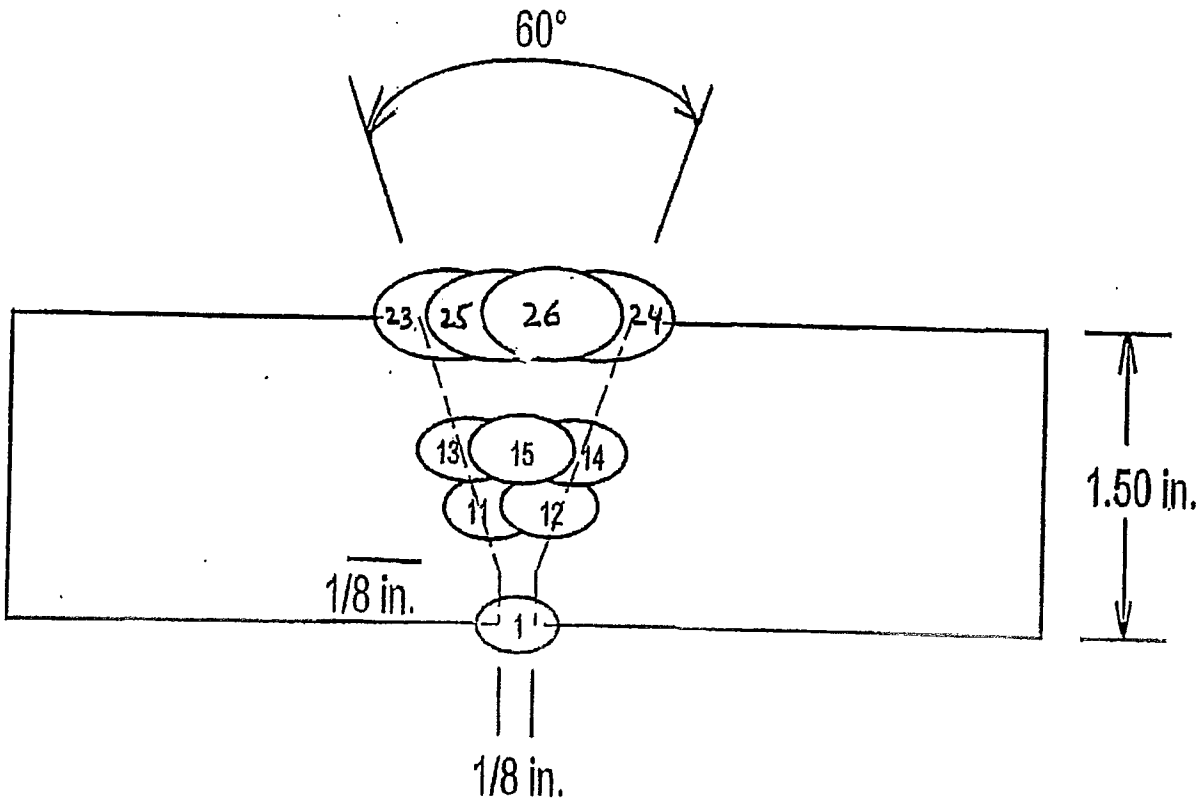

Pass	Process	Filler metal	Diameter Mm(in)	Current & Polarity	Amperage Range	Voltage Range	Travel Speed mm/min(i.p.m.)
1	SMAW	E6010	3.2(1/8)	DCRP	85-90	25-26	132/(5.2)
2	SMAW	E7018-1	3.2(1/8)	DCRP	125-135	21-23	125/(4.9)
3&4	SMAW	E7018-1	4.0(5/32)	DCRP	175-185	21-23	152-160/(6-6.3)
5-19	SMAW	E7018-1	5.0(3/16)	DCRP	240-250	22-24	153-218/(6-8.6)
20-26	SMAW	E7018-1	5.0(3/16)	DCRP	225-235	22-24	188-234/(7.4-9.2)

Enly Corp. recorded all process parameters during welding process.

PQR No.: Ec-2-Rev1

Tensile Test (QW-150)

Specimen Number	Width mm(in.)	Thickness mm(in.)	Area Sq. mm (Sq. in.)	Ultimate Load N (lbs.)	Ultimate stress MPa (Psi)	Character & Fracture Location
T1	19.1	37.4	714	352 845	494	Partial cup & cone
	(0.752)	(1.47)	(1.11)	(79,300)	(71,600)	Parent Metal
T1	19.1	37.4	714	350 497	491	Partial cup & cone
	(0.752	(1.47)	(1.11)	(78,800)	(71,200)	Parent Metal

GUIDED BEND TEST (QW-160)

Type & Figure No.	Result	Type & Figure No.	Result
QW-462.2, TBS-S1	Pass	QW-462.2, TBS-S3	Pass
QW-462.2, TBS-S2	Pass	QW-462.2, TBS-S4	Pass

OTHER TESTS

Vickers hardness- see attached laboratory report# C13-1304.2

Welder Name: Kyle Crouch	Certificate File No. W17776
Test Conducted By: Mark S Rajher	
Laboratory Test No.:C13-1304.2	

We certify the statements in this record are correct and that the test welds were prepared, welded and tested in accordance with the requirements of Section IX of the ASME Code.

Manufacturer: Enlyn Corp.	
Date:18 September 2013	Signed:

LABORATORY TEST REPORT

CUSTOMER: Enlyn Corp.
6511 - 67 Street
Red Deer, Alberta
T4P 1A3

Laboratory Test No.: C13-1304.2
Date: October 1, 2013

Attention: Waqar Ahmed

WPS Number:	EC-2 Rev 1
Material:	SA 516 Gr. 70 (Heat No.: 314610 - 32985)
Thickness:	38.1 mm (1.50 in.)
Thermal Condition:	PWHT @ 621 °C (1150 °F) for 180 minutes

Governing Specification: ASME Section IX, 2010 edition and latest addenda.

TENSILE TEST QW-150

MACHINE: Satec Systems Inc. MKIV 120HV S/N: 1314

SAMPLE NUMBER	T1 QW-462.1(a)		T2 QW-462.1(a)	
WIDTH mm (in)	19.1	(0.752)	19.1	(0.752)
THICKNESS mm (in)	37.4	(1.47)	37.4	(1.47)
AREA sq mm (sq in)	714	(1.11)	714	(1.11)
ULT. LOAD N (lbf)	352 845	(79,300)	350 497	(78,800)
UTS MPa (psi)	494	(71,600)	491	(71,200)
FRACTURE TYPE	Partial Cup & Cone		Partial Cup & Cone	
FRACTURE LOCATION	Parent Metal		Parent Metal	

Note: Imperial values calculated by direct conversion.

GUIDED-BEND TEST QW-160

SAMPLE TYPE - QW-462.2	Side Bend	Side Bend	Side Bend	Side Bend
SAMPLE NUMBER(S)	S1	S2	S3	S4
RESULTS	Pass	Pass	Pass	Pass

Laboratory Test Conducted In Calgary By: Timothy Colpitts / Xin (Vincent) Su, T.T.

Laboratory Test Certified By: _____ L-A-B Accredited Certificate Number L2057-1 Testing
Dan Nguyen, C.E.T.

This report (or certificate) is issued by the Company under its General Conditions for Inspection and Testing Services (copy available upon request). The issuance of this report (or certificate) does not exonerate buyers or sellers from exercising all their rights and discharging all their liabilities under the Contract of Sale. Stipulations to the contrary are not binding on the Company. The Company's responsibility under this report (or certificate) is limited to proven negligence and will in no case be more than ten times the amount of the fees or commission. Except by special arrangement, samples, if drawn, will not be retained by the Company for more than 30 days. The information stated in this report (or certificate) is derived from the results of inspection or testing procedures carried out in accordance with the instructions of our Client, and/or our assessment of such results on the basis of any technical standards, trade custom or practice, or other circumstances which should in our professional opinion be taken into account.

LABORATORY TEST REPORT

CUSTOMER:	Enlyn Corp. 6511 - 67 Street Red Deer, Alberta T4P 1A3	Laboratory Test No.:	C13-1304.2 Date: September 30, 2013
Attention:	Waqar Ahmed		

WPS Number:	EC-2 Rev 1
Material:	SA 516 Gr. 70 (Heat No.: 314610 - 32985)
Thickness:	38.1 mm (1.50 in.)
Thermal Condition:	PWHT @ 621 °C (1150 °F) for 180 minutes

Governing Specification: ASTM E384-11$^{\varepsilon 1}$, ANSI/NACE MR0175/ISO 15156-2:2009(E).

HARDNESS TEST

Type of Test: Vickers 10 kg (HV10) Instrument: Mitutoyo AVK-C1

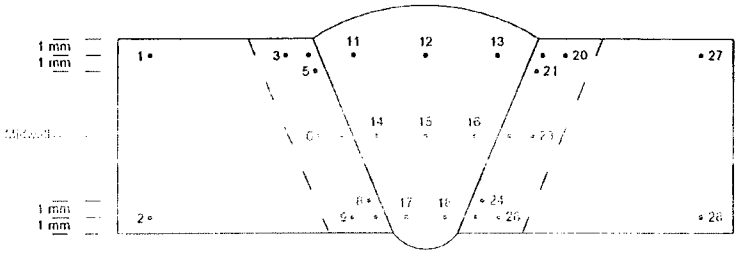

Parent Metal		HAZ		Weld Metal		HAZ		Parent Metal	
1	128	*3*	165	*11*	200	*19*	194	*27*	130
2	130	*4*	200	*12*	198	*20*	170	*28*	129
		5	193	*13*	195	*21*	181		
		6	158	*14*	197	*22*	193		
		7	180	*15*	180	*23*	169		
		8	163	*16*	200	*24*	148		
		9	151	*17*	146	*25*	161		
		10	155	*18*	149	*26*	152		

Laboratory Test Conducted In Calgary By: Xin (Vincent) Su, T.T.

Laboratory Test Certified By: Dan Nguyen, C.E.T. L-A-B Accredited Certificate Number L2057-1 Testing

This report (or certificate) is issued by the Company under its General Conditions for Inspection and Testing Services (copy available upon request). The issuance of this report (or certificate) does not exonerate buyers or sellers from exercising all their rights and discharging all their liabilities under the Contract of Sale. Stipulations to the contrary are not binding on the Company. The Company's responsibility under this report (or certificate) is limited to proven negligence and will in no case be more than ten times the amount of the fees or commission. Except by special arrangement, samples, if drawn, will not be retained by the Company for more than 30 days. The information stated in this report (or certificate) is derived from the results of inspection or testing procedures carried out in accordance with the instructions of our Client, and/or our assessment of such results on the basis of any technical standards, trade custom or practice, or other circumstances which should in our professional opinion be taken into account.

SGS Group (SGS SA)

WELDER PERFORMANCE QUALIFICATION TEST RECORD

Company	Enlyn Corp.	Contact	Tony Madsan
Welder's Name	Kyle Crouch	ABSA File No.	W-17776
WP Registration No.	3221.2	WPS No.	EC-2 (Rev. 1)
Welding Process(es)	SMAW	Type	Manual
Specification of Base Metal(s)	A 513 Gr. 1026	Thickness	15.9 mm (0.625 in.)

Welding Variables (QW-350)				**Actual Values**	**Range Qualified**
Backing				F3 None	With or without
				F4 With	With backing
Base metal P-No. 1 to P-No. 1				P1	P1
☐ Plate	☒ Pipe			2.50 in. O.D.	1.0 in. O.D. minimum
Filler metal or electrode specification(s)				SFA 5.1	WPS requirements
Filler metal or electrode classification(s)				E6010 / E7018-1	WPS requirements
Filler metal F-Number(s)				F3 / F4	F3 / F4
Deposit thickness for each process					
SMAW: F3	3 layers minimum	☐ Yes	☒ No	0.125 in.	0.250 in. maximum
SMAW: F4	3 layers minimum	☒ Yes	☐ No	0.500 in.	Max. to be welded
Position qualified				6G	All
Vertical progression				F3 Downhill	Downhill
				F4 Uphill	Uphill

RESULTS

Visual examination of completed weld (QW 302.4) Acceptable

Bend test ☒ QW-462.2; ☐ QW-462.3(a); ☐ QW-462.5(c); ☐ QW-462.5(d)

Side bend #S1	Pass	Side bend #S3	Pass
Side bend #S2	Pass	Side bend #S4	Pass

Alternative radiographic examination results (QW-191) N/A

We certify the statements in this record are correct and that the test welds were prepared, welded and tested in accordance with the requirements of Section IX of the ASME Boiler and Pressure Vessel Code.

ACCREDITED ORGANIZATION	SGS Ludwig Associates Ltd.	A.O.Q.P. Registration No.	7106 (C)
Test Conducted By	Rob Cormier, CSA W178.2 Level 1 Insp.	Date of Test	November 18, 2013
Certified By	Rob Cormier, C.E.T., I.W.T.	Welding Examiner File No.	E00441
Test Certified for Enlyn Corp. by Representative	Josh Eddie		

RECORD INFORMATION

SGS Ludwig Associates Ltd. testing facility	☐Edmonton	☒Calgary	☐Field
Date test coupon is to be retained	December 18, 2013	Test Coupon I.D. No.	C2-60
Welder Performance Qualification Card No.	12819	Laboratory Test No.	CW13-896.1



JOURNEYMAN CERTIFICATE

THIS IS TO CERTIFY THAT
KYLE L CROUCH
HAS COMPLETED AN ALBERTA APPRENTICESHIP PROGRAM AND HAVING ACHIEVED THE STANDARDS ESTABLISHED UNDER THE ALBERTA APPRENTICESHIP AND INDUSTRY TRAINING ACT, IS HEREBY AUTHORIZED TO WORK IN THE TRADE AS A JOURNEYMAN AND TO USE THE TITLE CERTIFIED JOURNEYMAN

WELDER

EFFECTIVE DATE
June 17th, 1999

ISSUE DATE
July 3rd, 1999

Alberta

Alberta
LABOUR

ABSA

Grade "B" Pressure Welder's
Certificate of Competency

This is to Certify that: Kyle Leslie Crouch
having complied with provisions of the Safety Codes Act, is authorized to engage in pressure welding in accordance with the prescribed Regulations.

Dated at Edmonton, this
August 19, 1999

W- 17776
File No.

Chief Inspector and Administrator

A.O.Q.P. No. 7106 (c)

LUDWIG ASSOCIATES LTD.

Materials and Welding Consulting

WELDER PERFORMANCE QUALIFICATION CARD

Name Kyle Crouch

ABSA File No.: W - 17776

This card is issued pursuant to the Alberta Safety Codes Act and the Pressure Welders Regulation. The performance qualification is in accordance with ASME Section IX of the ASME Code and subject to the limitations on the reverse side.

January 7, 2013
Date of Test

Signature of Welder or Machine Operator

Darren McLean
Welding Examiner

Card No.: 07779



Form No. AB-117 Rev (05/10)

№ 12302

PERFORMANCE QUALIFICATION			07779	
Process(es)	SMAW	SMAW	Materials (P.No)	P1
Filler Metal Group (F.No)	F3	F4	Min. Outside Diameter	1.0 In. O.D.
Max. Deposited Weld Metal	0.250 In.	MAX	Position(s) Qualified	All
Backing	With or Without	With	Backing Gas	N/A
Progression	Uphill	Uphill		

Jan. 7, 2015
P.Q. Expiry Date

Welding Examiner Signature

E-00113
Examiner File No.

A.O.Q.P. No. 7106 (c)

SGS LUDWIG

WELDER PERFORMANCE QUALIFICATION CARD

Name: Kyle Crouch ABSA File No.: W - 17776

This card is issued pursuant to the Alberta Safety Codes Act and the Pressure Welders Regulation. The performance qualification is in accordance with ASME Section IX of the ASME Code and subject to the limitations on the reverse side.

November 18, 2013 . Kyle Crouch

Date of Test Signature of Welder or Machine Operator

Rob Cormier
Welding Examiner Card No.: 12819

PERFORMANCE QUALIFICATION 12819

Process(es)	SMAW	SMAW	Materials (P.No)	P1
Filler Metal Group (F.No)	F3	F4	Min. Outside Diameter	1.0 In. O.D.
Max. Deposited Weld Metal	0.250 In.	MAX	Position(s) Qualified	All
Backing	With or Without	With	Backing Gas	N/A
Progression	Downhill	Uphill		

November 18, 2015 R Cormier E-00441
P.Q. Expiry Date Welding Examiner Signature Examiner File No.

A.O.Q.P. No. 7106 (c)

LUDWIG ASSOCIATES LTD.

Materials and Welding Consulting

WELDER PERFORMANCE QUALIFICATION CARD

Name: Kyle French ABSA File No.: W - 30722

This card is issued pursuant to the Alberta Safety Codes Act and the Pressure Welders Regulation. The performance qualification is in accordance with ASME Section IX of the ASME Code and subject to the limitations on the reverse side.

April 29, 2013
Date of Test

Signature of Welder or Machine Operator

Darren McLean
Welding Examiner

Card No.: 04655

Alberta

ABSA
the pressure equipment safety authority

26035

Grade "B" Pressure Welder's Certificate of Competency

This is to certify that Kyle French
having complied with provisions of the Safety Codes Act, is authorized to engage in pressure welding in accordance with the prescribed Regulations.

Dated at Edmonton
April 19, 2013

Government of Alberta

W-30722
File no.

Chief Inspector and Administrator

012-0/833531 116768A

JOURNEYMAN CERTIFICATE

THIS IS TO CERTIFY THAT
KYLE MARTIN FRENCH
HAS COMPLETED AN ALBERTA APPRENTICESHIP PROGRAM AND HAVING ACHIEVED THE STANDARDS ESTABLISHED UNDER THE ALBERTA APPRENTICESHIP AND INDUSTRY TRAINING ACT, IS HEREBY AUTHORIZED TO WORK IN THE TRADE AS A JOURNEYMAN AND TO USE THE TITLE CERTIFIED JOURNEYMAN

WELDER

EFFECTIVE DATE
September 10th, 2010

ISSUE DATE
September 30th, 2010

HONOURABLE DOUG HORNER
MINISTER OF
ADVANCED EDUCATION
AND TECHNOLOGY

Alberta

DARLENE BOUWSEMA
EXECUTIVE DIRECTOR
OF APPRENTICESHIP
& INDUSTRY TRAINING

PERFORMANCE QUALIFICATION 04655

Process(es)	SMAW	SMAW	Materials (P.No)	P1
Filler Metal Group (F.No)	F3	F4	Min. Outside Diameter	1.0 in. O.D.
Max. Deposited Weld Metal	0.260 in.	MAX	Position(s) Qualified	All
Backing	With or Without	With	Backing Gas	N/A
Progression	Uphill	Uphill		

April 29, 2015 — P.Q. Expiry Date

Welding Examiner Signature

E-00413 — Examiner File No.

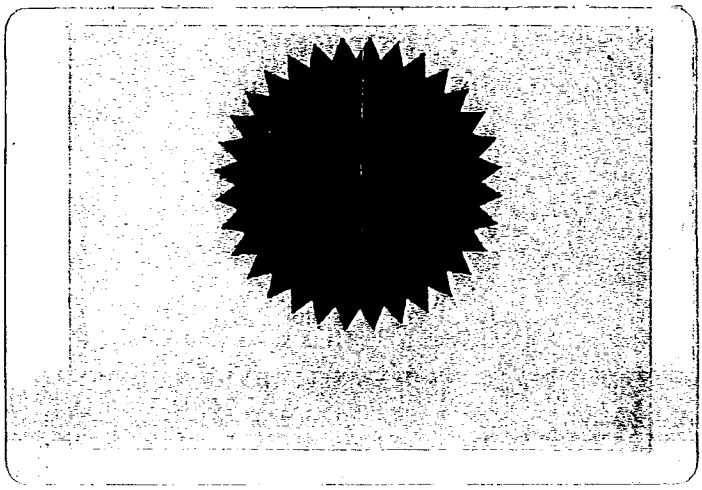

PRESSURE PIPING CONSTRUCTION AND TEST DATA REPORT

In accordance with the provisions of the PESR Section 31(1)

the pressure equipment safety authority

Shop Construction ☒; Field Construction ☐;
Final Data Report ☒; Partial Data Report ☐ (from one ABSA- authorized Contractor to another ABSA- authorized Contractor).

Complete both sides of this Form

1. Constructed By: Enlyn Corp Owner's Job No: 14-561-01
(Name of ABSA authorized primary contractor or subcontractor)
5509 Broadway Avenue, Blackfalds,AB T0M 0JO
(Address)
Certificate of Authorization Permit No. AQP-1543 Expiry Date: Nov 21, 2016

2. Constructed For: NuVista Energy Ltd.
(Name of primary contractor if different from above)
Scotia Centre, 700 2 St Sw, Calgary, AB T2P 2W1
(Address)
Certificate of Authorization Permit No. AQP- Expiry Date:
(Required when the primary contractor undertakes some/all of the quality functions, e.g., NDE, PWHT, Tie-in, fabrication, hydro test, final assembly etc.)

3. Owner: NuVista Energy Ltd (Scotia Centre, 700 2 St Sw, Calgary, AB T2P 2W1)
(Name and address)
(HZ 15-17) 02-16-068-08 W6M
(Location of installation)
Certificate of Authorization Permit No. AQP- Expiry Date:
(Required when the owner undertakes some/all of the quality functions, e.g., NDE, PWHT, Tie-in, fabrication, hydro test, final assembly etc.)

4. Piping Design Alberta Registration No.: PP-
(Required if aggregate piping volume is over 0.5m³)

5. Design Responsibility: Owner ☐; Contractor ☒

6. WP No.: WP-3221.2 ; Company: Enlyn Corp Owner's WP No. (If used): WP-
(Alberta Registration No.) (Alberta Registration No.)
WPS No(s). used: EC-1 Rev.1, ; Owner's WPS No(s). (If used):

7. Code: ASME B31.1 Non Boiler External Piping ☐; ASME B31.1 Boiler External Piping ☐;
B31.5 ☐; B31.9 ☐; CSA Z662 Steam Pipelines ☐;
ASME B31.3 ☒ - Service Category: Normal ☒, D ☐, M ☐, High Pressure ☐; Severe Cyclic Condition ☐
High Purity ☐

Drawing No. Rev. No. Line No.	Fluid (Air/Stm. Etc.)	Des. Press. PSIG	Des. Temp. °F (Max. & Min.)	Pressure Test PSIG	Test Medium	Pipe Mat'l Spec. & Grade	C.A. mm	Pipe NPS & Schedule	Flange Material & Rating	PWHT/ Preheat Temp. °C	NDE
14-561-B-01 Rev.5 1-FG-80-100,101,102	Fuel Gas	150	200°F / -20°F	165	Nitrogen	SA 106B	1/8"	1" Sch 80	Threaded Class 3000	N/A/N/A	100% VT
14-561-B-01 Rev.5 1-PH-80-100	Preheat	150	200°F / -20°F	225	H2O	SA 106B	1/8"	1" Sch 80	N/A	N/A/N/A	100% VT
14-561-B-01 Rev.5 1-PSVD-80-100,101	Pressure Relief	150	200°F / -20°F	165	Nitrogen	SA106B	1/8"	1" Sch 80	Threaded Class 3000	N/A/N/A	100% VT
14-561-B-01 Rev.5 Instrument Tubing	Fuel Gas/ Instrument Air	150	100°F / -20°F	165	Nitrogen	316L	0	0.035WT	N/A	N/A/N/A	100% VT

Partial Data Reports certified by sub-contractors are listed below and attached to this Data Report ☐

No.	Line No.	Spool No.	Dwg. No. (with Rev. No.)	Sub-contractor (Name)	AQP No. (if from Alberta)	Expiry (if from Alberta)

Remarks: For partial data report provide information about the code work that was not completed by the subcontractor (e.g., hydrostatic test, PWHT etc.). For final data report provide information about the code work that was not completed by subcontractors and subsequently completed by the primary contractor (e.g., hydrostatic test of entire assembly, PWHT etc.)

Endorse certificate 'A' or 'B'

A. CERTIFICATE OF COMPLIANCE

Signed by the subcontractor when supplying this certificate as a

Partial Data Report

We certify that the statements in this Data Report are correct and that materials, construction and workmanship of the piping fabrication conform to the registered quality system and the applicable Piping code(s).

Date: _____ _____
Contractor

_____ _____
Print Authorized Representative's Name Signature

This certificate is not valid unless it forms part of a Final Data Report signed by Primary Contractor

B. CERTIFICATE OF COMPLIANCE

Signed by the primary contractor when supplying this certificate as a

Final Data Report

We certify that the statements in this Data Report are correct and that piping job no. 14-561-01 described in this Data Report was constructed in accordance with the Province of Alberta Safety Codes Act and Regulations, and applicable ASME Piping Code(s).

Date: Feb 3/15 Enlyn Corp
Contractor

Mark Rajher (MR)
Print Authorized Representative's Name Signature

CERTIFICATE OF INSPECTION

I, the undersigned, employed by _____ have verified that all required examination and testing has been completed, and inspected the piping described in this construction data report to the extent necessary to be satisfied that it conforms to all applicable examination requirements of the Code and of the engineering design, and state that, to the best of my knowledge and belief, the contractor has constructed this piping in accordance with the Alberta Safety Codes Act and Regulations. By signing this certificate neither the inspector nor his or her employer makes any warranty, expressed or implied, concerning the piping described in this construction data report. Furthermore, neither the inspector nor his or her employer shall be liable in any manner for any personal injury or property damage or a loss of any kind arising from or connected with this inspection.

Date: _____ Date: _____

_____ _____
Owner's Inspector Name (please print) ABSA Safety Codes Officer (please print)
(BOILER EXTERNAL PIPING ONLY)

_____ _____
Owner's Inspector Signature: ABSA Safety Codes Officer's Signature

Current version of this Form may be obtained from www.absa.ca

ENLYN

Pressure Piping Examination and Inspection Sheet
Exhibit 21.2

DRAWING #		REV #		JOB #	14-561-01
NO.	FUNCTION			SIGNATURE OR INITIAL AND DATE	
		QC MANUAL REFERENCE	HOLD POINT	QC INSPECTOR	OWNER'S INSPECTOR
1	DRAWINGS: ABSA registration over 0.5m³. Approved by Owner. Approved for Construction, repair or Alteration (signed & dated)	21.3 21.4			
2	ABSA safety Codes Officer and Owner's Inspector notified.	21.15 21.21		—	
3	Registered Welding Procedures, QC Manual and forms available at site. Job file started.	21.2			
4	Welders/Machine Welding Operators qualified for weld procedures and have valid Performance Qualification cards. Welders/Machine Welding Operators log completed. WPS reviewed with welders/machine welding operators.	11.4 21.18			
5	Material checked against P.O., drawings and specifications Identification confirmed. Colour coding applied.	21.12 21.14			
6	Sample of each Welder's/Machine Welding Operator's work examined, including root spacing, alignment, cleaning, joint preparation, preheat and electrode control.	11.5 21.21			
7	Non-destructive examination completed. Reports and radiographs reviewed, signed by Level II or III, Radiograph I.D. detailed on drawings.	11.5 21.21			
8	Visual examination of all completed welds. Welders/Machine Welding Operators I.D. stamped and/or recorded on drawings	13.3			
9	Heat treatment verified and recorded on drawings.	14.6		—	
10	Each system checked against specifications and drawings before test, using Exhibit 21.3 and Exhibit 21.4.	21.21 21.23			
11	All deficiencies recorded and signed off by Q.C.I. and Owner's				
12	Pressure Test checked. Gauge calibration verified, gauge #', duration and hydro pressure recorded. — Gauge #1:	16.2 21.23			
	Gauge #2:				
	Test Pressure				
	Duration				
13	System checked after test. Deficiencies recorded and corrected.	21.23			
14	Construction data reports prepared and signed by Q.C.M. and Owner's Inspector.	21.21 (g)			
15	Declaration form submitted to ABSA (AB-81)	21.20 (c)			
16	As built drawings accepted by Owner.	21.21 (h)			

Hold points indicated by an asterisk*

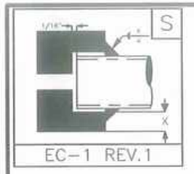

ITEM NUMBER	PART	QTY	MATERIAL	CUT LENGTH	HEAT NUMBER
1	1" SB0 SOCKET WELD PIPE	2	SA-106-B	CUT TO FIT	14100444
2	1" SB0 SOCKET WELD PIPE	1	SA-106-B	6573	14100444
3	1" SB0 90° SOCKET WELD ELBOW	2	SA-234-WPB		JTRA

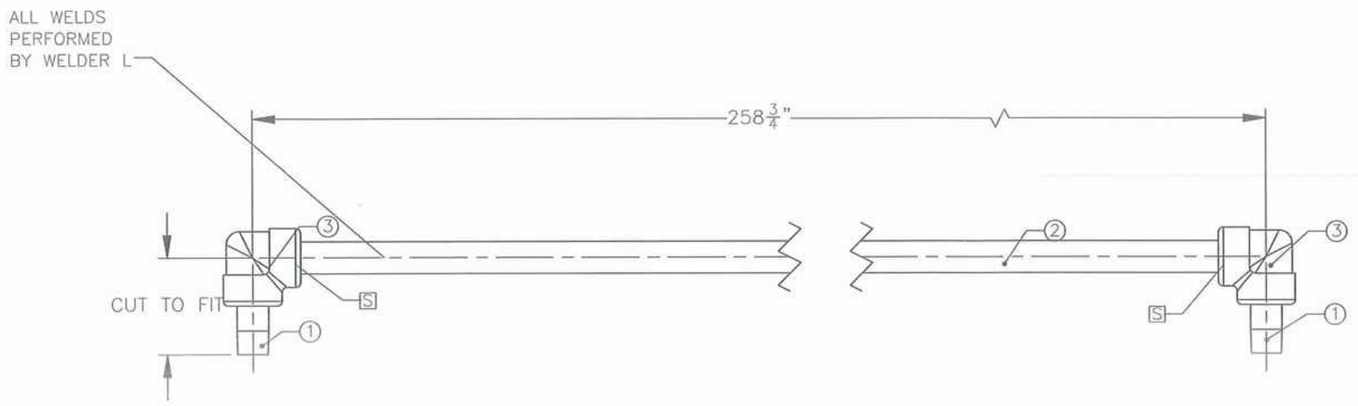

FUEL GAS PREHEAT COIL
SHOP TO DETERMINE CUT LENGTH

DESIGN DATA			
CONSTRUCTION AS PER ASME B31.3 2012 EDITION NORMAL FLUID SERVICE			
LINE NO:	1-PH-80-100	MAWP:	150 PSIG
LINE SPECS:	"AB" 150# SWEET	HYDROTEST:	225 PSIG
DESIGN TEMP:	200°F	C/A:	1.59mm
MDMT:	-20°F	YEAR BUILT:	2014
RADIOGRAPHY:	VT	HYDROTEST MED:	H20
PREHEAT:	N/A		
PWHT PER UCS-56:	N/A		
IMPACT TEST:	N/A		
CAPACITY:		WEIGHT (EMPTY):	
Q.C. PROGRAM:	AQP-1543	WELD PROC. REG:	WP 3221.2
INT. SANDBLAST:	N/A	INTERNAL PAINT:	N/A
EXT. SANDBLAST:	N/A	EXTERNAL PAINT:	N/A
REG'D CRN DWG NO:	N/A	REG'D CALC NO:	N/A

ENLYN
enlyn.com

2MM BTU/HR LINEHEATER

FUEL GAS PREHEAT COIL ASSEMBLY

	BY	DATE
DWN	E.L.	12/17/14
CHK		
ENG APP		
QC APP		

Customer: NuVista Energy

DWG NO:	REV	SHT	Shop Order:
14-561-01-C	3	11/11	14-561-01

REVISIONS			
REV	DESCRIPTION	DWN BY	DATE
3	AS BUILT	EL	4/17/15
1	CHANGED COIL/DETAILS	EL	12/24/14
2	CHANGED UNITS TO INCHES	EL	1/6/15

S

GENERAL NOTES:
1. ALL DIMENSIONS ARE IN INCHES UNLESS OTHERWISE NOTED.
2. SANDBLAST & PAINT.
3. GRIND ALL SHARP EDGES.
4. FINAL INSPECTION REQUIRED.

THIS DRAWING IS THE PROPERTY OF ENLYN PROCESS SYSTEMS AND IS NOT TO BE USED FOR ANY PURPOSE OTHER THAN FOR WHICH IT IS INTENDED

THE DRAWING IS THE PROPERTY OF ENLYN PROCESS SYSTEMS AND IS NOT TO BE USED FOR ANY PURPOSE OTHER THAN FOR WHICH IT IS INTENDED

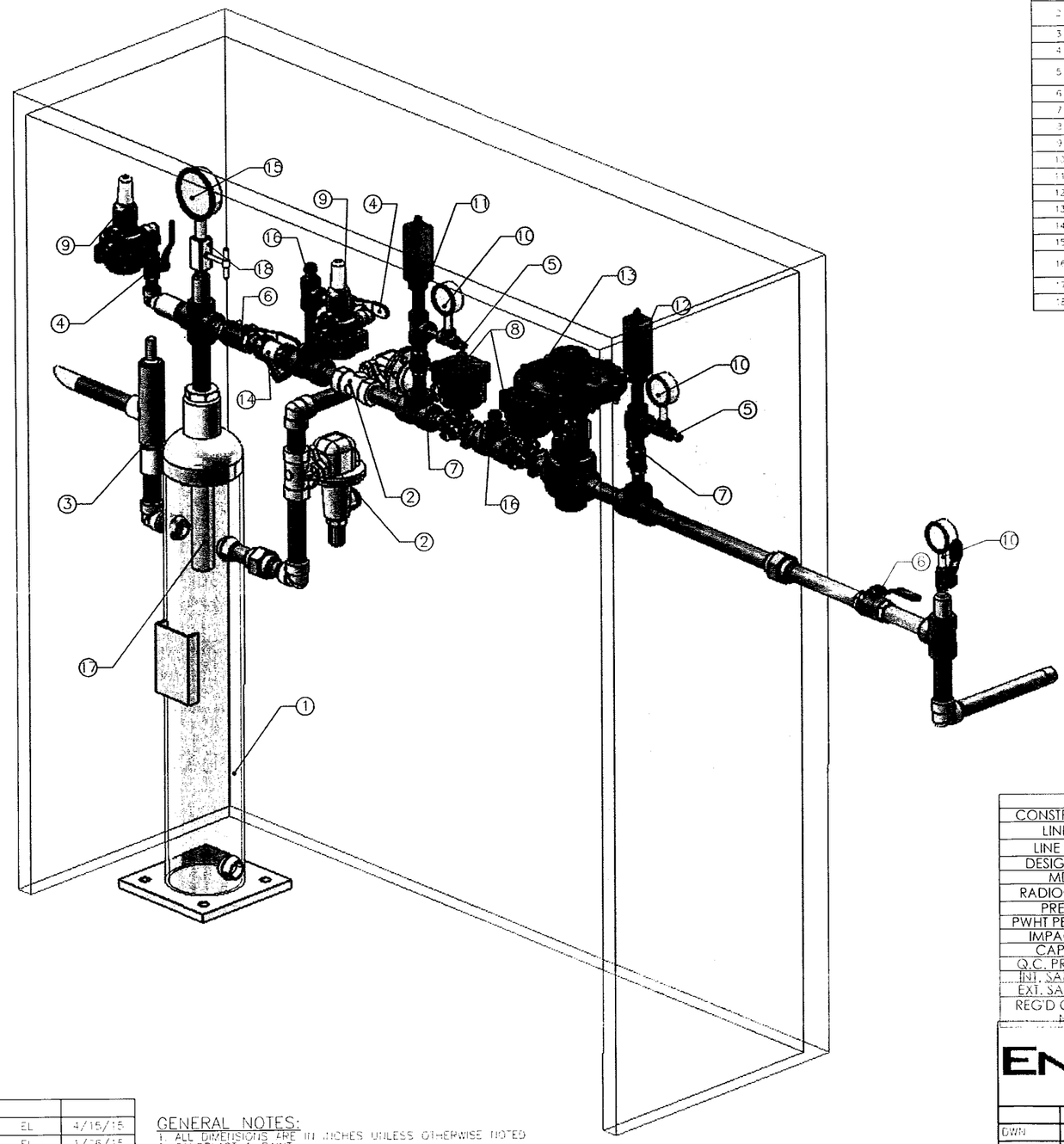

ITEM NUMBER	PART	QTY	MATERIAL	CUT LENGTH	HEAT NUMBER
1	6" x 36" SCRUBBER	1			
2	1" FISHER R27R PROCESS CONTROL VALVE	2			
3	1" X 1" NPT MERCER PSV	1			
4	1/4" 3M NPT BALL VALVE	3			
5	SS-600-1-4 1/4" X 3/8" TUBE C/A SS-600-P	2			
6	1" 3M NPT BALL VALVE	2			
7	1/2" 3M NPT BALL VALVE	2			
8	1" FNPT ASCO SOLENOID	2			
9	1/4" FNPT ASCO SOLENOID	2			
10	1/4" MNPT PRESSURE INDICATOR	3			
11	1/2" PRESSURE SWITCH LOW LOW	1			
12	1/2" PRESSURE SWITCH HIGH HIGH	1			
13	1" KIMRAY 1400 SMT PO	1			
14	1" Y-STRAINER	1			
15	1/2" MNPT PRESSURE INDICATOR	1			
16	SS-600-1-8 1/2" X 3/8" TUBE C/A SS-600-P	2			
17	2" NPT INTERNAL HLSD	1			
18	1/2" 3M FNPT NEEDLE VALVE	1			

DESIGN DATA			
CONSTRUCTION AS PER ASME B31.3 2012 EDITION NORMAL FLUID SERVICE			
LINE NO:	1-FG-80-102	MAWP:	150 PSIG
LINE SPECS:	"AB" 150# SWEET	HYDROTEST:	165 PSIG
DESIGN TEMP:	200°F	C/A:	1.59mm
MDMT:	-20°F	YEAR BUILT:	2014
RADIOGRAPHY:	VT	HYDROTEST MED:	N2
PREHEAT:	N/A		
PWHT PER UCS-56:	N/A		
IMPACT TEST:	N/A		
CAPACITY:		WEIGHT (EMPTY):	
Q.C. PROGRAM:	AQP-1543	WELD PROC. REG:	WP 3221.2
INT. SANDBLAST:	N/A	INTERNAL PAINT:	N/A
EXT. SANDBLAST:	N/A	EXTERNAL PAINT:	
REG'D CRN DWG NO:	N/A	REG'D CALC NO:	N/A

REVISIONS			
REV	DESCRIPTION	DWN. BY	DATE
0	ISSUED FOR REVIEW	EL	1/26/15
1	ISSUED FOR CONSTRUCTION	EL	4/15/15

GENERAL NOTES:
1. ALL DIMENSIONS ARE IN INCHES UNLESS OTHERWISE NOTED
2. SANDBLAST & PAINT.
3. GRIND ALL SHARP EDGES.
4. FINAL INSPECTION REQUIRED.
5. ALL VALVE HANDLES TO OPEN IN DIRECTION OF FLOW

ENLYN

FUEL GAS ASSEMBLY

	BY	DATE
DWN	E.L.	1/26/15
CHK		
ENG APP		
QC APP		

Customer: NUVISTA ENERGY

DWG NO:	REV	SHT	Shop Order:
14-561-01-FG	1	1/1	14-561-01

ABSA
the pressure equipment safety authority

9410 - 20 Ave N.W.
Edmonton, Alberta, Canada T6N 0A4
Tel: (780) 437-9100 / Fax: (780) 437-7787

October 23, 2013

Attention: Mark Rajher
ENLYN CORP
6511 67 STREET
RED DEER, AB

The welding procedure, tracking number 2013-07603, originally received on October 11, 2013 was surveyed and accepted for registration as follows:

Reg. No. : WP-3221.2 **Accepted on:** October 21, 2013

Reg Type: Revision To accepted Design

Spec. No. : EC-1 REV 1

An invoice covering survey and registration fees will be forwarded from our Revenue Accounts.

Enclosed is a stamped welding procedure for your reference.

Please note the acceptance of this registration does not allow the use of this welding procedure in the construction, modification, on any boiler, pressure vessel, pressure piping system or fitting in Alberta unless the contractor/manufacturer has registered a Quality Control System for such work with ABSA.

Sincerely,

R. Roseberg

ROSEBERG, BOB, P. Eng.

Enlyn Corp.

Welding Procedure Specification

In accordance with

ASME Section VIII, Section IX, B31.1 and B31.3

Welding procedure Specification No.: EC-1-Rev 1

Supporting PQR No. (s): PQR- EC-1-rev 1

Qualified for

Process (es): SMAW/SMAW		Position(s): All/All
Filler Metal F-No.: F-3/F-4		A-No.: A-1/A-1
AWS Classification: E6010/E7018-1		Weld Type(s): Groove, Fillet, weld Buildup
Base metal: P-1		To: P-1
Typical Materials: This procedure is qualified for all P-1 materials as specified in table QW-422 of ASME Section IX for applications where proven notch toughness properties are not required.		
Diameter Range: All diameters		Condition(s): As Welded
	Normal size	
Thickness Range: ASME Section VIII	0.188" to 1.500"	
ASME Section IX	0.188" to 1.500"	
ASME B31.1/B31.3	0.188" to 0.750"	

ABSA

SAFETY CODES ACT - PROVINCE OF ALBERTA
WELDING PROCEDURE

Reg. No. WP 3221.2
Spec. No. EC-1 (REV1)
Weld Process SMAW / SMAW
Matl. Gr. P No. 1 to P No. 1
Elec. Gr. F No. 3+4 A No. 1
Th. Qual. For 3.8 / mm P.W.H.T. NO

Yr. 13 Mo. 10 Day 31 Signed

R. ROSEBERG, P.ENG.
WELDING SPECIALIST

Welding Procedure Specification (WPS) QW-482

(Section IX, ASME Boiler and pressure vessel Code)

Company Name: Enlyn Corp. By: Mark Rajher

WPS No: EC-1-Rev1 Date: September 9, 2011

Revision No.: Rev1 Revision Date: Sept 17, 2013

Supporting PQR's: PQR-EC-1-Rev1

Welding Process (es): SMAW/SMAW Type(s): Manual/Manual

JOINTS QW-402	Joints Details
Joint Design: Butt, Tee, Lap, Corner, etc. Backing: F-3 filler metal with or without backing F-4 electrodes with backing only. Weld built up with or without fluid backing	**All ASME joint designs.** Reference construction Drawing for joint details. Where joint details are not specified, refer to typical joint detail sheet provided

Backing Material (Type): Similar base or weld metal or back welding as required. No Retainers.

BASE METALS QW-403

P-No.: P-1 Group No.: --------- to P-No.: P-1 Group No.: ---------

OR

Spec. type & grade: Not Applicable to Spec. type & grade: Not Applicable

OR

Chem. Analysis & Mech. Prop: Not Applicable to Chem. Analysis & Mech. Prop: Not Applicable

Thickness Range

	Normal Size	
Base Metal: Groove: Section VIII	0.188" to 1.500"	Fillet: All
Section IX	0.188" to 1.500"	Fillet: All
B31.1/ B31.3	0.188" to 0.750"	Fillet: All
Pipe Dia Range: Groove: All		Fillet: All
Other: Maximum thickness of any weld layer shall not exceed 0.500"		

construction code is mandatory prior to production welding to determine any supplementary restrictions Reference to relevant

Filler Metals QW-404

Process:	SMAW	SMAW
Specification No. (SFA):	5.1	5.1
AWS Classification No.:	E6010	E7018-1
F-No:	F-3	F-4
A-No.:	A-1	A-1
Size of Filler Metal:	3/32",1/8",5/32"	3/32",1/8",5/32", 3/16",7/32", 1 /4"
Weld Metal Thickness- Groove	0.188"max	1.500" max
Fillet:	Unlimited	Unlimited
Weld Buildup:	Unlimited	Unlimited
Electrode –Flux (Class):	Not Applicable	Not Applicable
Flux Trade Name:	Not Applicable	Not Applicable
Alloy Flux:	Not Applicable	Not Applicable
Consumable Insert:	Not Applicable	Not Applicable
Supplement Filler Metals:	Not Applicable	Not Applicable
Product Form:	Covered Electrode	Covered electrode
Other:	Not Applicable	Not Applicable

Welding Procedure Specification (WPS) QW-482

(Section IX, ASME Boiler and pressure vessel Code)

WPS# EC-1-Rev1

POSITIONS QW-405	POST HEAT TRATMENT QW-407
Position(s) of Groove: All	Temp. Range: Not Applicable
Weld Progression: F-3 SMAW Vertical Up or Down	Time Range: Not Applicable
F-4 SMAW Vertical Up	Heating: Not Applicable
Position(s) of Fillet: ALL	Cooling: Not Applicable
PREHEAT QW-406	**GAS QW-408**
Temperature Min.: See Next Page	Shielding Gas(es): Not Applicable
Interpass Temp Max.: See Next Page	Composition:
Interpass Temp Min: See Next Page	Flow Rate:
Preheat Maintenance: Monitor using tempilstiks, Pyrometer or other suitable methods	Gas Backing:
	Backing Rate:

ELECTRIC CHARACTERISTICS QW-409

Current: F-3 SMAW: Direct-DC	F-4 SMAW: Direct-DC
Polarity:F-3 SMAW: Reverse EP	F-4 SMAW: Reverse EP
Amp(Range): F-3 SMAW: 50-180	F-4 SMAW: 50-360
Volts (Range): F-3 SMAW : 20-32	F-4 SMAW: 18-32
Travel Speed (Range)-ipm: F-3 SMAW: 1-16	F-4 SMAW: 1-22
Tungsten electrode Type & Size: Not Applicable	
Mode of Metal Transfer for GMAW: Not Applicable	
Electrode Wire feed speed range: Not Applicable	
Others: Not Applicable	

TECHNIQUE QW-410

String or Weave Bead: String and weave. Weave size shall be controlled to prevent weld defects.
Orifice or Gas Cup Size: Not Applicable
Initial Cleaning: Base Material must be thoroughly cleaned of all foreign material(Scale, rust, oil, grease, paint, Tar, etc.) at least 1" back on each side of the joint prior to welding. All surfaces to be welded Shall be smooth, uniform and free from notches, slag, fins and burrs.
Interpass cleaning: Perform by wire brush, chipping hammer, power brushing grinding etc. after each weld layer
Method of back Gouging: Arc air, gouge, grind etc., if required. Grind to clean metal where thermal processes are used.
Contact tube to Work Distance: Not Applicable
Multiple or Single Pass (per side): Single or multiple passes per side.
Multiple or single Electrodes: Single electrodes only
Peening: Peening is not allowed.

TYPICAL WELDING PARAMETERS

	Filler Metal		Current			
Process	AWS Classification	Diameter (in)	Type & Polarity	Amp. Range	Voltage Range	Travel Speed (IPM)
SMAW	E6010	3/32	DC EP	50-100	20-32	1-12
SMAW	E6010	1/8	DC EP	50-150	20-32	2-14
SMAW	E6010	5/32	DC EP	70-180	22-32	4-16
SMAW	E7018-1	3/32	DC EP	50-110	18-24	1-12
SMAW	E7018-1	1/8	DC EP	70-160	19-26	1-16
SMAW	E7018-1	5/32	DC EP	110-220	20-28	1-18
SMAW	E7018-1	3/16	DC EP	160-320	20-30	2-20
SMAW	E7018-1	7/32	DC EP	240-340	20-32	3-22
SMAW	E7018-1	1/4	DC EP	275-360	20-32	4-22

Notes: Number of weld layers and size of filler metal may vary with thickness of base material and position of weld
1/4" E7018-1 electrodes are limited to flat (1G) position only.

Reference to relevant construction code is mandatory prior to production welding to determine any supplementary restrictions.

Welding Procedure specification (WPS) QW-482

(Section IX, ASME Boiler and Pressure Vessel Code)

WPS#EC-1 Rev. 1

PREHEAT AND INTERPASS TEMPERATURE MINIMUM AND MAXIMUM	
Section VIII:	50°F minimum for all P-1 materials except as listed below: 175°F If the joint thickness exceeds 1.000" and specificed carbon content exceeds 0.30% 200°F if the joint thickness is 1.250" to 1.500"
B31.1:	50°F minimum for all P-1 materials except as listed below:
B31.3:	50°F minimum for all P-1 materials except as listed below: 175°F if the specified minimum tensile strength of the base metal exceeds 71 ksi
Max. Interpass Temp: 650°F for normal service, 550°F when proven notch toughness is required	

Reference to relevant construction code is mandatory prior to production welding to determine any supplementary restrictions.

Typical Joint Details QW-482

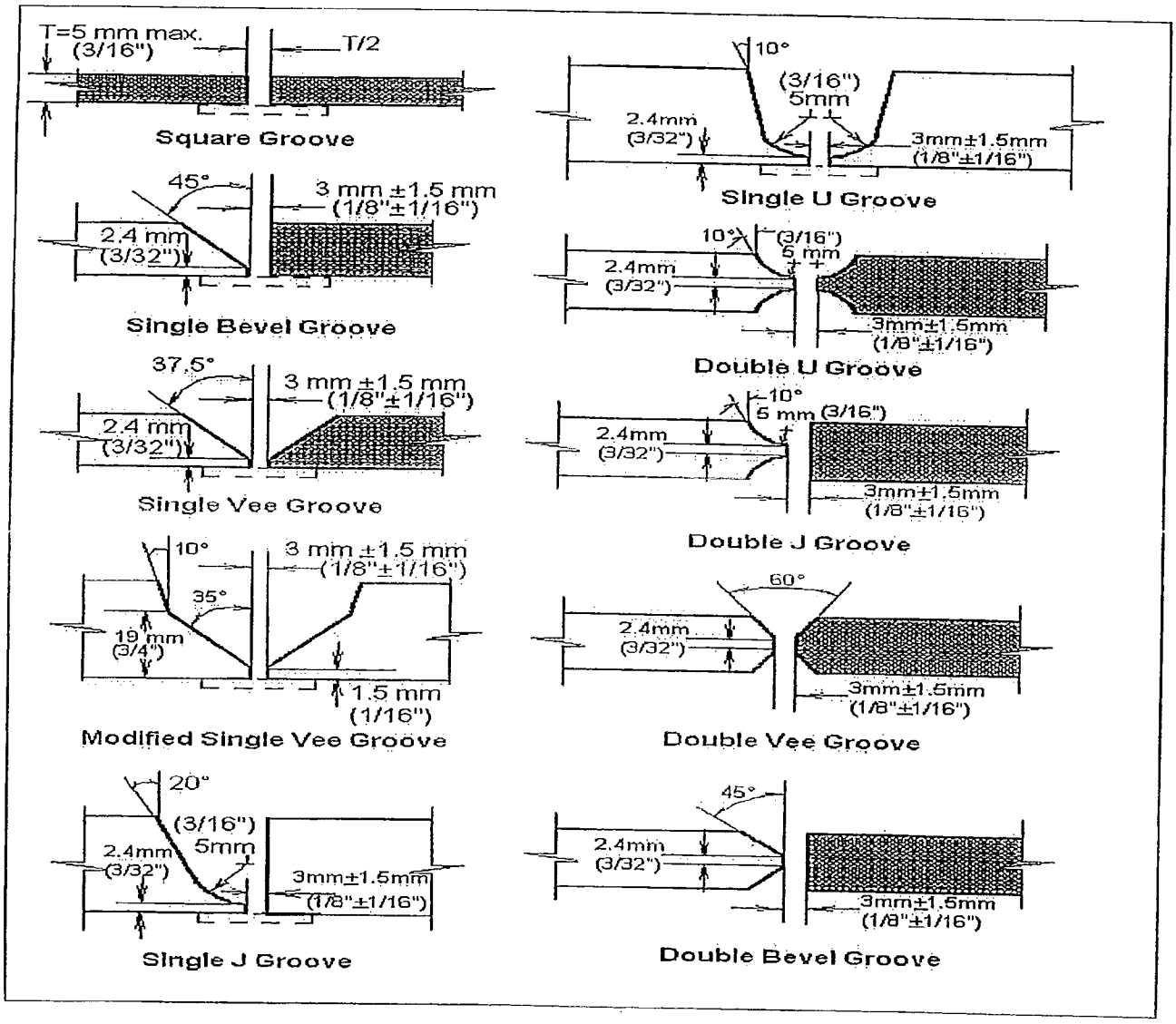

QW-483 PROCEDURE QUALIFICATION RECORD (PQR)

Enlyn Corp.

Procedure Qualification Record No.: EC-1- Rev1 Date: September 18, 2013

Welding Procedure Specification No.: EC-1-Rev1

Welding Process (es): SMAW Type(s): Manual

JOINTS (QW-402)

Type: Butt joint, single vee groove, see next page

Base Metals (QW-403)

Material Spec.: SA 516	Type or Grade: Gr. 70N
P-No: P1 to P-No. P1	Thickness: 38.1mm (1.50 in)
Diameter: N/A	Other: Plate product form

Filler Metals (QW-404)

Specification No. (SFA):	SFA5.1	SFA5.1
AWS No. (Class)	E6010	E7018-1
Filler Metal F-No.	F3	F4
Filler Metal A-No.	A1	A1
Size of Electrode:	See attached sketch	See attached sketch
Deposited Weld Metal Thickness:	2.39mm (0.094 in)	35.7mm (1.406 in.)

Position (QW-405)

Position of Groove: 1G

Weld Progression: N/A

PREHEAT (QW-406)

Preheat Temperature: 66°C (150°F) Interpass Temp (Max.): 315°C (600°F)

POST WELD HEAT TREATMENT (QW-407)

Temperature: None Time: N/A

Electrical Characteristics (QW-409)

Current: Direct	Polarity: Reverse, electrode positive
Amp: See Next Page	volts: See next page
Max heat Input: N/A	

TECHNIQUE (QW-410)

String or Weave: Root: String	Remainder: Weave	Travel speed: See next page
Multiple or Single pass per side: Multiple pass from groove side		
Multiple or Single Electrode: Single		

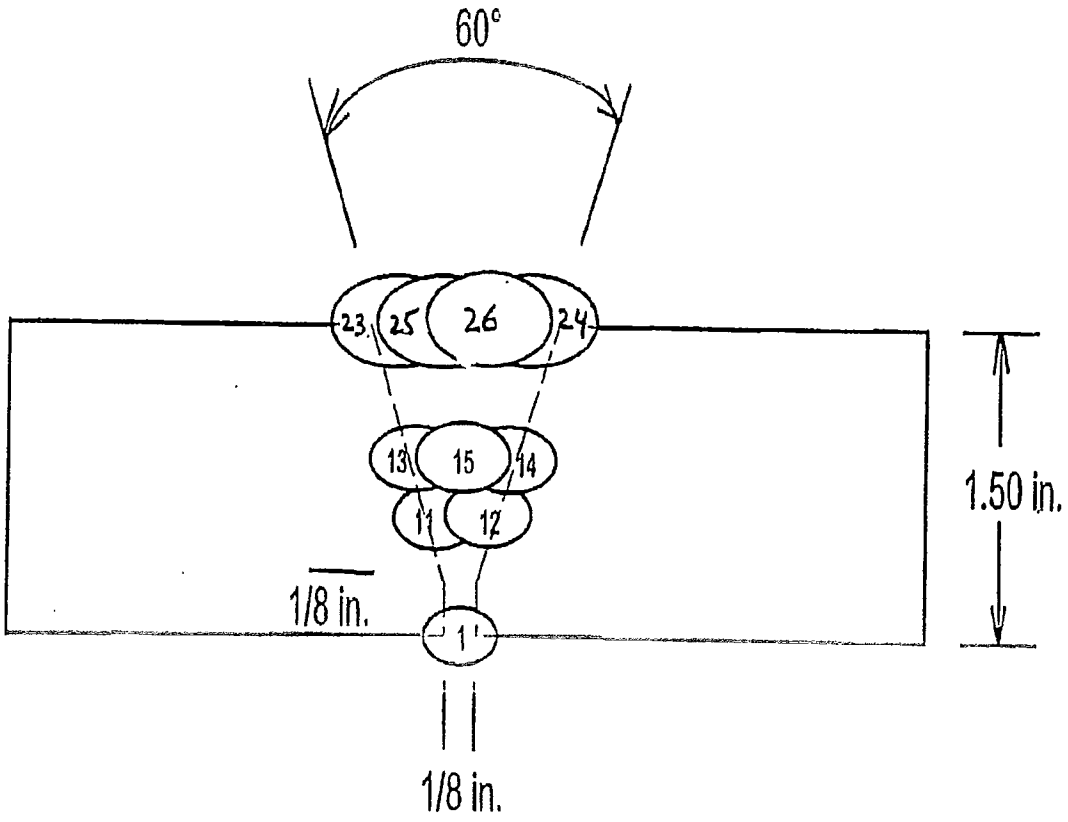

Pass	Process	Filler metal	Diameter Mm(in)	Current & Polarity	Amperage Range	Voltage Range	Travel Speed mm/min(i.p.m.)
1	SMAW	E6010	3.2(1/8)	DCRP	85-90	25-26	132/(5.2)
2	SMAW	E7018-1	3.2(1/8)	DCRP	125-135	21-23	125/(4.9)
3&4	SMAW	E7018-1	4.0(5/32)	DCRP	175-185	21-23	152-160/(6-6.3)
5-19	SMAW	E7018-1	5.0(3/16)	DCRP	240-250	22-24	153-218/(6-8.6)
20-26	SMAW	E7018-1	5.0(3/16)	DCRP	225-235	22-24	188-234/(7.4-9.2)

Enly Corp. recorded all process parameters during welding process.

Tensile Test (QW-150)

Specimen Number	Width mm(in.)	Thickness mm(in.)	Area Sq. mm (Sq. in.)	Ultimate Load N (lbs.)	Ultimate stress MPa (Psi)	Character & Fracture Location
T1	19.1	37.7	720	380 304	528	Partial cup& cone
	(0.752)	(1.48)	(1.12)	(85 500)	(76 600)	Parent metal
T2	19.0	37.7	716	379 179	529	Partial cup & cone
	(0.748)	(1.48)	(1.11)	(85 200)	(76 800)	Parent metal

GUIDED BEND TEST (QW-160)

Type & Figure No.	Result	Type & Figure No.	Result
Qw-462.2, TSB-S1	Pass	Qw-462.2, TSB-S3	Pass
Qw-462.2, TSB-S2	Pass	Qw-462.2, TSB-S4	Pass

OTHER TESTS

Vickers hardness- see attached laboratory report# C13-1304.1

Welder Name: Kyle Crouch	Certificate File No. W17776
Test Conducted By: Mark S Rajher	
Laboratory Test No.: C13-1304.1	

We certify the statements in this record are correct and that the test welds were prepared, welded and tested in accordance with the requirements of Section IX of the ASME Code.

Manufacturer: Enlyn Corp.	
Date: 18 September 2013	Signed:

LABORATORY TEST REPORT

CUSTOMER: **Enlyn Corp.**
6511 - 67 Street
Red Deer, Alberta
T4P 1A3

Laboratory Test No.: C13-1304.1
Date: October 1, 2013

Attention: Waqar Ahmed

WPS Number:	EC-1 Rev 1
Material:	SA 516 Gr. 70 (Heat No.: 314610 - 32985)
Thickness:	38.1 mm (1.50 in.)
Thermal Condition:	As welded

Governing Specification: ASME Section IX, 2010 edition and latest addenda.

TENSILE TEST QW-150

MACHINE: Tinius Olsen Super L-400 S/N: 110585

SAMPLE NUMBER	T1 QW-462.1(a)		T2 QW-462.1(a)	
WIDTH mm (in)	19.1	(0.752)	19.0	(0.748)
THICKNESS mm (in)	37.7	(1.48)	37.7	(1.48)
AREA sq mm (sq in)	720	(1.12)	716	(1.11)
ULT. LOAD N (lbf)	380 304	(85,500)	379 179	(85,200)
UTS MPa (psi)	528	(76,600)	529	(76,800)
FRACTURE TYPE	Partial Cup & Cone		Partial Cup & Cone	
FRACTURE LOCATION	Parent Metal		Parent Metal	

Note: Imperial values calculated by direct conversion.

GUIDED-BEND TEST QW-160

SAMPLE TYPE - QW-462.2	Side Bend	Side Bend	Side Bend	Side Bend
SAMPLE NUMBER(S)	S1	S2	S3	S4
RESULTS	Pass	Pass	Pass	Pass

Laboratory Test Conducted In Calgary By: Xin (Vincent) Su, T.T.

Laboratory Test Certified By: _____ L-A-B Accredited Certificate Number L2057-1 Testing
Dan Nguyen, C.E.T.

This report (or certificate) is issued by the Company under its General Conditions for Inspection and Testing Services (copy available upon request). The issuance of this report (or certificate) does not exonerate buyers or sellers from exercising all their rights and discharging all their liabilities under the Contract of Sale. Stipulations to the contrary are not binding on the Company. The Company's responsibility under this report (or certificate) is limited to proven negligence and will in no case be more than ten times the amount of the fees or commission. Except by special arrangement, samples, if drawn, will not be retained by the Company for more than 30 days. The information stated in this report (or certificate) is derived from the results of inspection or testing procedures carried out in accordance with the instructions of our Client, and/or our assessment of such results on the basis of any technical standards, trade custom or practice, or other circumstances which should in our professional opinion be taken into account.

LUDWIG ASSOCIATES LTD. IS NOW PART OF SGS, THE WORLD'S LEADING INSPECTION, VERIFICATION, TESTING AND CERTIFICATION COMPANY.

4027 - 14 Street S.E. Calgary AB T2G 3K6 t +1 (403) 262-7072 f +1 (403) 265-3169
7925 Daviès Road Edmonton AB T6E 4N1 t +1 (780) 468-3030 f +1 (780) 468-3032 www.ludwigassociatesltd.com www.sgs.com

Member of the SGS Group (SGS SA)

LABORATORY TEST REPORT

CUSTOMER:	**Enlyn Corp.** 6511 - 67 Street Red Deer, Alberta T4P 1A3	**Laboratory Test No.:** **Date:**	C13-1304.1 September 30, 2013
Attention:	Waqar Ahmed		

WPS Number:	EC-1 Rev 1
Material:	SA 516 Gr. 70 (Heat No.: 314610 - 32985)
Thickness:	38.1 mm (1.50 in.)
Thermal Condition:	As welded

Governing Specification: ASTM E384-11$^{\varepsilon 1}$, ANSI/NACE MR0175/ISO 15156-2:2009(E).

HARDNESS TEST

Type of Test: Vickers 10 kg (HV10) Instrument: Mitutoyo AVK-C1

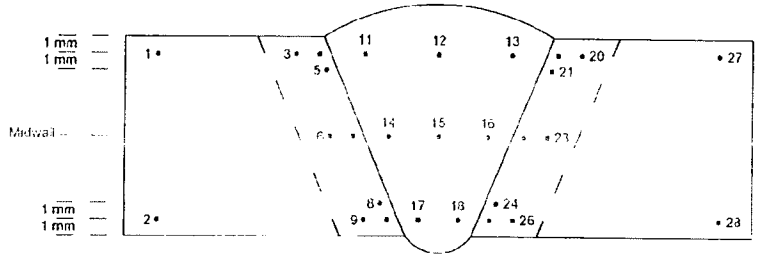

Parent Metal		HAZ		Weld Metal		HAZ		Parent Metal	
1	148	*3*	194	*11*	210	*19*	231	*27*	151
2	136	*4*	224	*12*	212	*20*	194	*28*	136
		5	236	*13*	212	*21*	234		
		6	181	*14*	190	*22*	179		
		7	194	*15*	175	*23*	171		
		8	183	*16*	179	*24*	188		
		9	183	*17*	172	*25*	188		
		10	184	*18*	189	*26*	186		

Laboratory Test Conducted In Calgary By: Xin (Vincent) Su, T.T.

Laboratory Test Certified By: Dan Nguyen, C.E.T. L-A-B Accredited Certificate Number L2057-1 Testing

This report (or certificate) is issued by the Company under its General Conditions for Inspection and Testing Services (copy available upon request). The issuance of this report (or certificate) does not exonerate buyers or sellers from exercising all their rights and discharging all their liabilities under the Contract of Sale. Stipulations to the contrary are not binding on the Company. The Company's responsibility under this report (or certificate) is limited to proven negligence and will in no case be more than ten times the amount of the fees or commission. Except by special arrangement, samples, if drawn, will not be retained by the Company for more than 30 days. The information stated in this report (or certificate) is derived from the results of inspection or testing procedures carried out in accordance with the instructions of our Client, and/or our assessment of such results on the basis of any technical standards, trade custom or practice, or other circumstances which should in our professional opinion be taken into account.

LUDWIG ASSOCIATES LTD. IS NOW PART OF SGS, THE WORLD'S LEADING INSPECTION, VERIFICATION, TESTING AND CERTIFICATION COMPANY.

4027 - 14 Street S.E. Calgary AB T2G 3K6 t +1 (403) 262-7072 f +1 (403) 266-3169
7925 Davies Road Edmonton AB T6E 4N1 t +1 (780) 468-3030 f +1 (780) 468-3032 www.ludwigassociatesltd.com www.sgs.com

Member of the SGS Group (SGS SA)

WELDER PERFORMANCE QUALIFICATION TEST RECORD

Company	Enlyn Corp.	Contact	Tony Madsan
Welder's Name	Kyle Crouch	ABSA File No.	W-17776
WP Registration No.	3221.2	WPS No.	EC-2 (Rev. 1)
Welding Process(es)	SMAW	Type	Manual
Specification of Base Metal(s)	A 513 Gr. 1026	Thickness	15.9 mm (0.625 in.)

Welding Variables (QW-350)				**Actual Values**	**Range Qualified**
Backing				F3 None	With or without
				F4 With	With backing
Base metal P-No. 1 to P-No. 1				P1	P1
☐ Plate	☒ Pipe			2.50 in. O.D.	1.0 in. O.D. minimum
Filler metal or electrode specification(s)				SFA 5.1	WPS requirements
Filler metal or electrode classification(s)				E6010 / E7018-1	WPS requirements
Filler metal F-Number(s)				F3 / F4	F3 / F4
Deposit thickness for each process					
SMAW: F3	3 layers minimum	☐ Yes	☒ No	0.125 in.	0.250 in. maximum
SMAW: F4	3 layers minimum	☒ Yes	☐ No	0.500 in.	Max. to be welded
Position qualified				6G	All
Vertical progression				F3 Downhill	Downhill
				F4 Uphill	Uphill

RESULTS

Visual examination of completed weld (QW-302.4) Acceptable

Bend test ☒ QW-462.2; ☐ QW-462.3(a); ☐ QW-462.5(c); ☐ QW-462.5(d)

Side bend #S1	Pass	Side bend #S3	Pass
Side bend #S2	Pass	Side bend #S4	Pass

PASS

Alternative radiographic examination results (QW-191) N/A

We certify the statements in this record are correct and that the test welds were prepared, welded and tested in accordance with the requirements of Section IX of the ASME Boiler and Pressure Vessel Code.

ACCREDITED ORGANIZATION	SGS Ludwig Associates Ltd.	A.O.Q.P. Registration No.	7106 (C)
Test Conducted By	Rob Cormier, CSA W178.2 Level 1 Insp.	Date of Test	November 18, 2013
Certified By	Rob Cormier, C.E.T., I.W.T.	Welding Examiner File No.	E00441
Test Certified for Enlyn Corp. by Representative			Josh Eddie

RECORD INFORMATION

SGS Ludwig Associates Ltd. testing facility	☐Edmonton	☒Calgary	☐Field
Date test coupon is to be retained	December 18, 2013	Test Coupon I.D. No.	C2-60
Welder Performance Qualification Card No.	12819	Laboratory Test No.	CW13-896.1

4027 - 1st Street S.E. Calgary AB T2C 3K8 Tel (403) 262-7072 Fax (403) 266-3169
7925 Davies Road Edmonton AB T6E 4N1 Tel (780) 468-3059 Fax (780) 468-3032 www.ludwigassociatesltd.com www.sgs.com

Member of the SGS Group (SGS SA)

WELDER PERFORMANCE QUALIFICATION TEST RECORD

Company	Enlyn Corp.	Contact	Tony Madsan
Welder's Name	Kyle Crouch	ABSA File No.	W-17776
WP Registration No.	3221.2	WPS No.	EC-2 (Rev. 1)
Welding Process(es)	SMAW	Type	Manual
Specification of Base Metal(s)	SA 106 Gr. B	Thickness	5.54 mm (0.218 in.)

Welding Variables (QW-350)			**Actual Values**	**Range Qualified**
Backing			F3 None	With or without
			F4 With	With backing
Base metal P-No. 1 to P-No. 1			P1	P1
☐ Plate	☒ Pipe		2.375 in. O.D.	1.0 in. O.D. minimum
Filler metal or electrode specification(s)			SFA 5.1	WPS requirements
Filler metal or electrode classification(s)			E6010 / E7018-1	WPS requirements
Filler metal F-Number(s)			F3 / F4	F3 / F4
Deposit thickness for each process				
SMAW: F3 3 layers minimum	☐ Yes	☒ No	0.094 in.	0.188 in. maximum
SMAW: F4 3 layers minimum	☐ Yes	☒ No	0.124 in.	0.248 in. maximum
Position qualified			6G	All
Vertical progression			Uphill	Uphill

RESULTS

Visual examination of completed weld (QW-302.4) Acceptable

Bend test ☐ QW-462.2; ☒ QW-462.3(a); ☐ QW-462.5(c); ☐ QW-462.5(d)

Transverse face bend #F1	Pass	Transverse root bend #R1	Pass
Transverse face bend #F2	Pass	Transverse root bend #R2	Pass

Alternative radiographic examination results (QW-191) N/A

We certify the statements in this record are correct and that the test welds were prepared, welded and tested in accordance with the requirements of Section IX of the ASME Boiler and Pressure Vessel Code.

ACCREDITED ORGANIZATION	SGS Ludwig Associates Ltd.	A.O.Q.P. Registration No.	7106 (C)
Test Conducted By	Rob Cormier, CSA W178.2 Level 1 Insp.	Date of Test	November 18, 2013
Certified By	Rob Cormier, C.E.T., I.W.T.	Welding Examiner File No.	E00441
Test Certified for Enlyn Corp. by Representative			Josh Eddie

RECORD INFORMATION

SGS Ludwig Associates Ltd. testing facility	☐Edmonton	☒Calgary	☐Field
Date test coupon is to be retained	December 18, 2013	Test Coupon I.D. No	C2-58
Welder Performance Qualification Card No	12817	Laboratory Test No	CW13-896.2

4027 - 14 Street S.E. Calgary AB T2G 3K6 t +1 (403) 262 7072 f +1 (403) 266 3169
7925 Davies Road Edmonton AB T6E 4N1 t +1 (780) 468 3030 f +1 (780) 468 3032 www.ludwigassociatesltd.com www.sgs.com

Member of the SGS Group (SGS SA)

A.O.Q.P. No. 7106 (c)

SGS LUDWIG

WELDER PERFORMANCE QUALIFICATION CARD

Name: Kyle Crouch ABSA File No.: W - 17776

This card is issued pursuant to the Alberta Safety Codes Act and the Pressure Welders Regulation. The performance qualification is in accordance with ASME Section IX of the ASME Code and subject to the limitations on the reverse side.

November 18, 2013 — Signature of Welder or Machine Operator

Date of Test

Rob Cormier

Welding Examiner

Card No.: 12817

PERFORMANCE QUALIFICATION 12817

Process(es)	SMAW	SMAW	Materials (P.No)	P1
Filler Metal Group (F.No)	F3	F4	Min. Outside Diameter	1.0 in. O.D.
Max. Deposited Weld Metal	0.188 in.	0.248 in.	Position(s) Qualified	All
Backing	With or Without	With	Backing Gas	N/A
Progression	Uphill	Uphill		

November 18, 2015 — P.Q. Expiry Date

Welding Examiner Signature

E-0044 I — Examiner File No.

A.O.Q.P. No. 7106 (c)

SGS LUDWIG

WELDER PERFORMANCE QUALIFICATION CARD

Name: Kyle Crouch ABSA File No.: W - 17776

This card is issued pursuant to the Alberta Safety Codes Act and the Pressure Welders Regulation. The performance qualification is in accordance with ASME Section IX of the ASME Code and subject to the limitations on the reverse side.

November 18, 2013 Kyle Crouch

Date of Test Signature of Welder or Machine Operator

Rob Cormier

Welding Examiner Card No.: 12819

PERFORMANCE QUALIFICATION 12819

Process(es)	SMAW	SMAW	Materials (P.No)	P1
Filler Metal Group (F.No)	F3	F4	Min. Outside Diameter	1.0 in. O.D.
Max. Deposited Weld Metal	0.250 in.	MAX	Position(s) Qualified	All
Backing	With or Without	With	Backing Gas	N/A
Progression	Downhill	Uphill		

November 18, 2015 P.Q. Expiry Date

Welding Examiner Signature

E-00441 Examiner File No.

ENILYN
enlyn.com

NDE EXAMINATION INSTRUCTION SHEET

Exhibit 13.2

Date: Jan 13/2015

DESCRIPTION	DIMENSIONS	CODE	MATERIAL ID#	JOB #	NDE	WELDER ID	COMMENTS
11 3" SC 160	3 in	B31.3 NFS	SA106B/SA234WPB/SA105N	14-561-01	RT	L	
12 3" SC 160	3 in	B31.3 NFS	SA106B/SA234WPB/SA105N	14-561-01	RT	O	

Piping Flashes Must Contain:

Enlyn, Date, Code of Construction (i.e B31.3 NFS), Job #, X Ray#, Welder ID

Vessel Flashes Must Contain:

Enlyn, Date, Code of Construction (i.e Sec VII Div. 1), Job #, Vessel Serial #, X Ray#, Welder ID

RADIOGRAPHY INSPECTION REPORT

DATE:	January 13th 2015	**REPORT # :**	RJC-150113-1	**PAGE:**	1 of 2
CLIENT:	Enlyn			**ECHO JOB NO:**	N/A
CONTRACTOR:	same as above	**PROJECT:**	Job # 14-561-01		
LOCATION:	Blackfalds, AB	**CLIENT JOB # (PO, WO #, AFE....):**	n/a		
ACCEPTANCE CRITERIA / SPECIFICATION:	ASME B31.3 normal fluid service				
MATERIAL:	CS **SOURCE / SIZE:** Ir 192 / 3.2mm	**SCREENS:** 0.010" Pb - Front & Back		**FILM MANUFACTURER :**	Fuji - Single Loaded
DENSITOMETER MANUFACTURER:	LCNDT Corp. **Model:** DT-100 **SERIAL NO.:**	121277	**CAL DATE:** October 14th 2014	**All densities verified and within tolerance unless otherwise noted*	

ABBREVIATIONS

BT- Burn Through	IC - Internal Concavity	LF- Lack of Fusion	S - Slag	WE - Wall Exposures (SW or DW)	SFD - Source to Film Distance	1 - Slight
EP - Excess Penetration	IP - Incomplete Penetration	O - Other	T - Technique	WS - Welder Symbol	SOD - Min. Source to Object Distance	2 - Moderate
HL - High / Low	LC - Low Cover	P - Porosity	UC - Undercut (IUC / EUC)	WV - Wall Viewing (SW or DW)	OFD - Max. Object to Film Distance	3 - Severe

INTERPRETATIONS

FILM NO.	DIA / SIZE	SCH / WT	WS	T	# OF EXP	FILM TYPE	WE	WV	SFD	SOD	OFD	IP	LF	P	S	BT	EP	IC	LC	HL	UC	O	COMMENTS	ACC (√)	REJ (X)
																								☐	
X-1	3"	S160	O	RT-1	4	50	DW	SW	3.625"	3.062"	0.563"			1	1								porosity @ 6.5, 14 slag @ 28	☑	
X-2	3"	S160	O	RT-1	4	50	DW	SW	3.625"	3.062"	0.563"	1											incomplete penetration @ 0	☑	
X-3	3"	S160	O	RT-1	4	50	DW	SW	3.625"	3.062"	0.563"													☑	
X-4	3"	S160	O	RT-1	4	50	DW	SW	3.625"	3.062"	0.563"				1							1	slag @ 11, 14 welder stamp @ 17	☑	
X-5	3"	S160	L	RT-1	4	50	DW	SW	3.625"	3.062"	0.563"	1		1									incomplete penetration @ 0 porosity @ 25	☑	
X-6	3"	S160	O	RT-1	4	50	DW	SW	3.625"	3.062"	0.563"			1									porosity @ 0	☑	
X-7	3"	S160	O	RT-1	4	50	DW	SW	3.625"	3.062"	0.563"													☑	
X-8	3"	S160	O	RT-1	4	50	DW	SW	3.625"	3.062"	0.563"			1									porosity @ 14	☑	
X-9	3"	S160	L	RT-1	4	50	DW	SW	3.625"	3.062"	0.563"													☑	
X-10	3"	S160	O	RT-1	4	50	DW	SW	3.625"	3.062"	0.563"			1								1	porosity @ 20.5 welder stamp @ 3	☑	
X-11	3"	S160	L	RT-1	4	50	DW	SW	3.625"	3.062"	0.563"											1	welder stamp @ 22	☑	
X-12	3"	S160	L	RT-1	4	50	DW	SW	3.625"	3.062"	0.563"													☑	
X-13	3"	S160	O	RT-1	4	50	DW	SW	3.625"	3.062"	0.563"				1							1	slag @ 14 welder stamp @ 30	☑	
X-14	3"	S160	L	RT-1	4	50	DW	SW	3.625"	3.062"	0.563"													☑	
X-15	3"	S160	O	RT-1	4	50	DW	SW	3.625"	3.062"	0.563"											1	welder stamp @ 1 film mark @ 22	☑	
																								☐	
																								☐	
																								☐	
																								☐	

Client: (signature)		name/certification/signature	Film / Miscellaneous Charges	Regular Hours	see cost
Client: (name)	Tony Maosca	Joel Cressey SNT-TC-1A RTII CGSB# 17325		Overtime Hours	estimate
				Shift Premium	
				Kilometers	
			Assistant Nolan	LOA	

59 Burnt Park Drive | Red Deer, AB | T4P 0J7
Ph: (403) 347-7042 Fax: (403) 347-7052 www.echonde.com

RADIOGRAPHY INSPECTION REPORT

DATE:	January 13th 2015	**REPORT # :**	RJC-150113-2	**PAGE:**	2 of 2
CLIENT:	Enlyn			**ECHO JOB NO:**	N/A
CONTRACTOR:	same as above	**PROJECT:**	Job # 14-561-01		
LOCATION:	Blackfalds, AB	**CLIENT JOB # (PO, WO #, AFE....):**	n/a		
ACCEPTANCE CRITERIA / SPECIFICATION:	ASME B31.3 normal fluid service				
MATERIAL:	CS **SOURCE / SIZE:** Ir 192 / 3.2mm	**SCREENS:** 0.010" Pb - Front & Back		**FILM MANUFACTURER :**	Fuji - Single Loaded
DENSITOMETER MANUFACTURER:	LCNDT Corp. **Model:** DT-100 **SERIAL NO.:**	121277	**CAL DATE:** October 14th 2014	*All densities verified and within tolerance unless otherwise noted	

ABBREVIATIONS

BT- Burn Through	IC - Internal Concavity	LF- Lack of Fusion	S - Slag	WE - Wall Exposures (SW or DW)	SFD - Source to Film Distance	1 - Slight
EP - Excess Penetration	IP - Incomplete Penetration	O - Other	T - Technique	WS - Welder Symbol	SOD - Min. Source to Object Distance	2 - Moderate
HL - High / Low	LC - Low Cover	P - Porosity	UC - Undercut (IUC / EUC)	WV - Wall Viewing (SW or DW)	OFD - Max. Object to Film Distance	3 - Severe

INTERPRETATIONS

FILM NO.	DIA / SIZE	SCH / WT	WS	T	# OF EXP	FILM TYPE	WE	WV	SFD	SOD	OFD	IP	LF	P	S	BT	EP	IC	LC	HL	UC	O	COMMENTS	ACC (V)	REJ (X)
																								☐	
X-16	3"	S160	L	RT-1	4	50	DW	SW	3.625"	3.062"	0.563"													☑	
X-17	3"	S160	L	RT-1	4	50	DW	SW	3.625"	3.062"	0.563"			3								1	porosity @ 12, 15-17 film mark @ 2-4	☐	☒
X-18	3"	S160	O	RT-1	4	50	DW	SW	3.625"	3.062"	0.563"													☑	
X-19	3"	S160	L	RT-1	4	50	DW	SW	3.625"	3.062"	0.563"			1									porosity @ 14	☑	
X-20	3"	S160	L	RT-1	4	50	DW	SW	3.625"	3.062"	0.563"			1	1								porosity @ 6 slag @ 22	☑	
X-21	3"	S160	L	RT-1	4	50	DW	SW	3.625"	3.062"	0.563"													☑	
X-22	3"	S160	L	RT-1	4	50	DW	SW	3.625"	3.062"	0.563"				1								slag @ 0	☑	
X-23	3"	S160	O	RT-1	4	50	DW	SW	3.625"	3.062"	0.563"													☑	
																								☐	
																								☐	
																								☐	
																								☐	
																								☐	
																								☐	
																								☐	
																								☐	
																								☐	
																								☐	
																								☐	

Client: (signature)		**name/certification/signature**	**Film / Miscellaneous Charges**	**Regular Hours**	see cost
Client: (name)	Tony Madsen	Joel Cressey SNT-TC-1A RTII CGSB# 17325		**Overtime Hours**	estimate
				Shift Premium	
				Kilometers	
			Assistant Nolan	**LOA**	

59 Burnt Park Drive | Red Deer, AB | T4P 0J7
Ph: (403) 347-7042 Fax: (403) 347-7052 www.echonde.com

ENILYN

NDE EXAMINATION INSTRUCTION SHEET

Exhibit 13.2

Date: Jan 16/2015

DESCRIPTION	DIMENSIONS	CODE	MATERIAL ID#	JOB #	NDE	WELDER ID	COMMENTS
7 3" SC 160	3 in	B31.3 NFS	SA106B/SA234WPB/SA105N	14-561-01	RT	L	
6 3" SC 160	3 in	B31.3 NFS	SA106B/SA234WPB/SA105N	14-561-01	RT	O	
1 3" SC 160	3 in	B31.3 NFS	SA106B/SA234WPB/SA105N	14-561-01	RT	L	Repair X-17

Piping Flashes Must Contain:

Enlyn, Date, Code of Construction (i.e B31.3 NFS), Job #, X Ray#, Welder ID

Vessel Flashes Must Contain:

Enlyn, Date, Code of Construction (i.e Sec VII Div. 1), Job #, Vessel Serial #, X Ray#, Welder ID

RADIOGRAPHY INSPECTION REPORT

DATE:	16/01/2015	REPORT # :	RBM-150116-1	PAGE:	1 0F 1
CLIENT:	ENLYN			ECHO JOB NO:	
CONTRACTOR:	ENI YN	PROJECT:	RT OF 3" 160 COIL WELDS.		
LOCATION:	BLACKFALDS	CLIENT JOB # (PO, WO #, AFE....):	JOB # 14-561-01		
ACCEPTANCE CRITERIA / SPECIFICATION:	ASME B31.3 NFS				
MATERIAL:	CS	SOURCE / SIZE: Ir 192 / 3.2mm	SCREENS: 0.010" Pb - Front & Back	FILM MANUFACTURER :	Fuji - Single Loaded
DENSITOMETER MANUFACTURER:	Konica Minolta	SERIAL NO.: 6015079	CAL DATE: NOV. 27/14	*All densities verified and within tolerance unless otherwise noted*	

ABBREVIATIONS

BT- Burn Through	IC - Internal Concavity	LF- Lack of Fusion	S - Slag	WE - Wall Exposures (SW or DW)	SFD - Source to Film Distance	1 - Slight
EP - Excess Penetration	IP - Incomplete Penetration	O - Other	T - Technique	WS - Welder Symbol	SOD - Min. Source to Object Distance	2 - Moderate
HL - High / Low	LC - Low Cover	P - Porosity	UC - Undercut (IUC / EUC)	WV - Wall Viewing (SW or DW)	OFD - Max. Object to Film Distance	3 - Severe

INTERPRETATIONS

FILM NO.	DIA / SIZE	SCH / WT	WS	T	# OF EXP	FILM TYPE	WE	WV	SFD	SOD	OFD	IP	LF	P	S	BT	EP	IC	LC	HL	UC	O	COMMENTS	ACC (√)	REJ (X)
X24	3"	S160	O	RT-1	4	50	DW	SW	3.625"	3.062"	0.563"											1	FM @ 1.5	☑	
X25	3"	S160	O	RT-1	4	50	DW	SW	3.625"	3.062"	0.563"						1						EP1 @ 0.5	☑	
X26	3"	S160	O	RT-1	4	50	DW	SW	3.625"	3.062"	0.563"				1							1	FM @ 10.75, S1 @ 7.5	☑	
X27	3"	S160	L	RT-1	4	50	DW	SW	3.625"	3.062"	0.563"				1							1	STAMP @ 0, S1 @ 0.5	☑	
X28	3"	S160	O	RT-1	4	50	DW	SW	3.625"	3.062"	0.563"			1				1					P1 @ 10, IC1 @ 11	☑	
X29	3"	S160	L	RT-1	4	50	DW	SW	3.625"	3.062"	0.563"			3		1						1	P3 @ 11-0, BT1 @ 5(VISUALLY VERIFIED), FM @ 8	☐	X
X30	3"	S160	L	RT-1	4	50	DW	SW	3.625"	3.062"	0.563"											1	FM @ 2, SPAT @ 4	☑	
X31	3"	S160	L	RT-1	4	50	DW	SW	3.625"	3.062"	0.563"			1								1	P1 @ 8.5, 9.5, SPAT @ 3	☑	
X32	3"	S160	O	RT-1	4	50	DW	SW	3.625"	3.062"	0.563"				2								S2 @ 1.5, S1 @ 3	☑	
X33	3"	S160	L	RT-1	4	50	DW	SW	3.625"	3.062"	0.563"			2								1	P2 @ 6, FM @ 1.5	☑	
X34	3"	S160	L	RT-1	4	50	DW	SW	3.625"	3.062"	0.563"			1	1								P1 @ 1,3, S1 @ 9.5-10	☑	
X35	3"	S160	L	RT-1	4	50	DW	SW	3.625"	3.062"	0.563"							1					IC 1 @ 9	☑	
X36	3"	S160	O	RT-2	4	50	DW	SW	3.625"	3.062"	0.563"				3								S33 @ 10-11	☐	X
																								☑	
																								☑	
																								☑	
X17R	3"	S160	L	RT-1	4	50	DW	SW	3.625"	3.062"	0.563"			2				2			1		UC1 @ 4, P2 @ 5, IC2 @ 5-6	☑	
																								☐	
																								☐	
																								☐	

Client: (signature)		Film / Miscellaneous Charges	Regular Hours
Client: (name)	Tony Madsen		Overtime Hours
			Shift Premium
			Kilometers
		Assistant	Brandon M, Connor, Tyler Black
			LOA

BOYD HARVEY # 5584
CGSB RTIII / MTII / PTII / UTI
SNT-TC-1A RTIII / MTII / PTII / UTI

59 Burnt Park Drive I Red Deer, AB I T4P 0J7
Ph: (403) 347-7042 Fax: (403) 347-7052 www.echonde.com

ENILYN

NDE EXAMINATION INSTRUCTION SHEET

Exhibit 13.2

Date: Jan 20/2015

DESCRIPTION	DIMENSIONS	CODE	MATERIAL ID#	JOB #	NDE	WELDER ID	COMMENTS
1 3" SC 160	3 in	B31.3 NFS	SA106B/SA234WPB/SA105N	14-561-01	RT	L	Repair X-29
1 3" SC 160	3 in	B31.3 NFS	SA106B/SA234WPB/SA105N	14-561-01	RT	O	Repair X-36

Piping Flashes Must Contain:

Enlyn, Date, Code of Construction (i.e B31.3 NFS), Job #, X Ray#, Welder ID

Vessel Flashes Must Contain:

Enlyn, Date, Code of Construction (i.e Sec VII Div. 1), Job #, Vessel Serial #, X Ray#, Welder ID

RADIOGRAPHY INSPECTION REPORT

DATE:	20/01/2015	REPORT # :	RNF-150120-3	PAGE:	1 of 1
CLIENT:	ENLYN			ECHO JOB NO:	
CONTRACTOR:	ENLYN	PROJECT:	JOB# 14-561-01 3" S/160 COIL		
LOCATION:	BLACKFALDS	CLIENT JOB # (PO, WO #, AFE....):			
ACCEPTANCE CRITERIA / SPECIFICATION:	ASME B31.3NFS				
MATERIAL:	SS	SOURCE / SIZE: Ir 192 / 3.2mm	SCREENS: 0.010" Pb - Front & Back	FILM MANUFACTURER :	AGFA - Single Loaded
DENSITOMETER MANUFACTURER:	KONICA MINOLTA	SERIAL NO.:	6014492	CAL DATE:	23/10/2014

*All densities verified and within tolerance unless otherwise noted

ABBREVIATIONS

BT- Burn Through	IC - Internal Concavity	LF- Lack of Fusion	S - Slag	WE - Wall Exposures (SW or DW)	SFD - Source to Film Distance	1 - Slight
EP - Excess Penetration	IP - Incomplete Penetration	O - Other	T - Technique	WS - Welder Symbol	SOD - Min. Source to Object Distance	2 - Moderate
HL - High / Low	LC - Low Cover	P - Porosity	UC - Undercut (IUC / EUC)	WV - Wall Viewing (SW or DW)	OFD - Max. Object to Film Distance	3 - Severe

INTERPRETATIONS

FILM NO.	DIA / SIZE	SCH / WT	WS	T	# OF EXP	FILM TYPE	WE	WV	SFD	SOD	OFD	IP	LF	P	S	BT	EP	IC	LC	HL	UC	O	COMMENTS	ACC (√)	REJ (X)
X-29R1	3"	S/160	L	RT-1	4	50	DW	SW	3.5"	2.937"	0.563"													☑	
X-36-R1	3"	S/160	O	RT-1	4	50	DW	SW	3.5"	2.937"	0.563"													☑	
																								☐	
																								☐	
																								☐	
																								☐	
																								☐	
																								☐	
																								☐	
																								☐	
																								☐	
																								☐	
																								☐	
																								☐	
																								☐	
																								☐	
																								☐	
																								☐	
																								☐	
																								☐	

Client: (signature)		NAME/CERTIFICATION/SIGNATURE	Film / Miscellaneous Charges	Regular Hours	1
Client: (name)	TONY MADSEN	Neal Fleming CGSB / SNT-TC-1A LII RT/ MT / PT #10617	2-3" S/160 WELDS	Overtime Hours	
				Shift Premium	1
				Kilometers	
			Assistant BEN ST.CROIX	LOA	

59 Burnt Park Drive | Red Deer, AB | T4P 0J7
Ph: (403) 347-7042 Fax: (403) 347-7052 www.echonde.com

Natural Resources Canada | Ressources naturelles Canada



Name / Nom: Clifford Boyd Harvey
Reg. No. / No. matricule: 5584
Issue Date / Date d'émission: 2013/01/17

This card does not identify the stated individual to be an employee or representative of Natural Resources Canada, Government of Canada.
Cette carte n'identifie pas l'individu d'être un employé ou un représentant de Ressources naturelles Canada, Gouvernement du Canada.

Corrective lenses for [X] near [X] far vision.
Verres correctifs pour la vision de [X] près [X] distance.

Signature :

Natural Resources Canada | Ressources naturelles Canada

5584

Method / Methode	Level / Niveau	Sector / Secteur	Cert. Date / Date cert.	Date recert. / Date recert.	Expires / Expiration
MT	2	EMC	1992/12/16		2015/12/31
PT	2	EMC	1995/06/26		2015/12/31
RT	3	EMC	2009/08/11		2015/12/31
UT	1	EMC	2001/03/31		2015/12/31

For verification of certification status, policies and definitions, visit website: http://ndt.nrcan.gc.ca/ Pour la verification de la certification, les politiques, et les définitions, visitez le site web: http://ndt.nrcan.gc.ca/

ECHO NDE — Echo NDE Inc.
53A Burnt Park Drive / Red Deer, AB / T4P 0J7

This is to certify that: *Boyd Harvey*

Is certified as an SNT-TC-1A Level III in RT

Issue Date: August 2009 — Expiry: December 2015

Boyd Harvey — Darryl Coleman, SNT-TC-1A Level III

ECHO NDE — Echo NDE Inc.
53A Burnt Park Drive / Red Deer, AB / T4P 0J7

This is to certify that: *Boyd Harvey*

Is certified as an SNT-TC-1A Level II in MT/ PT

Issue Date: March 2007 — Expiry: December 2015

Boyd Harvey — Darryl Coleman, SNT-TC-1A Level III

ECHO NDE — Echo NDE Inc.
53A Burnt Park Drive / Red Deer, AB / T4P 0J7

This is to certify that: *Boyd Harvey*

Is certified as an SNT-TC-1A Level I in UT

Issue Date: March 2007 — Expiry: December 2015

Boyd Harvey — Darryl Coleman, SNT-TC-1A Level III

Clifford Boyd Harvey
5584
Registration Number
Numéro de matricule

is certified by the Canadian Nuclear Safety Commission as an Exposure Device Operator.

est accrédité par la Commission canadienne de sûreté nucléaire à titre d'opérateur d'appareil d'exposition.

2013/02/01	2017/11/01	
Issue Date / Date d'émission	Expiry Date / Date d'expiration	Designated Officer / Fonctionnaire désigné

Canadian Nuclear Safety Commission — Commission canadienne de sûreté nucléaire — Canada

Natural Resources Canada | Ressources naturelles Canada

Canada

NRCAN EYE EXAMINATION REPORT - NDT PERSONNEL

Three vision assessments may be required: Near Vision, Distance Vision (visual testing method only) and Colour Vision (initial certification only). This form must be completed and returned to the NDT Certifying Agency when applying for examination in any NDT method, renewal of certification or recertification

CANDIDATE'S NAME: Brad Harvey REGISTRATION NUMBER: 5584

Near Vision and Distance Vision – to be completed by medically recognized personnel (ophthalmologist, optometrist, physician, nurse, etc.)

Near vision acuity: shall permit reading Times Roman N4.5 (Jaeger number 2) or equivalent letters at not less than 30 cm with one or both eyes, either corrected or uncorrected.

I CONFIRM THAT THE CANDIDATE:
(Please check ☑ one)
- ☑ Meets the requirement without correction
- ☐ Meets the requirement with correction
- ☐ Does not meet the requirement

Distance vision acuity: **(required only for the visual testing method)** shall equal Snellen Fraction 20/30 or better in at least one eye, either corrected or uncorrected.

I CONFIRM THAT THE CANDIDATE:
(Please check ☑ one)
- ☐ Meets the requirement without correction
- ☑ Meets the requirement with correction
- ☐ Does not meet the requirement

Examiner's Name (Please Print/Type) | Examiner's Signature

Appointment Title | Date of Eye Examination yyyy mm/dd

Colour Vision (required only for initial certification, not for renewal or recertification)
- to be completed by medically recognized personnel or the employer or certified level 3 NDT personnel.

NOTE: A candidate who passes an Ishihara test (short or long) is acceptable. As an alternative or in case of a failure of an Ishihara test, the employer or Level 3 NDT personnel may administer a performance test to confirm if the candidate can see flaw indications that are typical of the method. Example: In liquid penetrant, confirm that the candidate can see red indications on a white background and fluorescent-green indications on a variety of backgrounds.

I CONFIRM THAT THE CANDIDATE CAN DISTINGUISH CONTRAST BETWEEN THE COLOURS USED IN THE NDT METHOD(S) CONCERNED AS SPECIFIED BY THE EMPLOYER (OR PASSED AN ISHIHARA TEST).

Examiner's Name (Please Print/Type) | Examiner's Signature

Appointment Title | Date of Eye Examination yyyy mm/dd

NOTE: PROVINCIAL HEALTH CARE PROGRAMS MAY NOT COVER THE COST FOR AN EYE EXAMINATION

EMPLOYEE QUALIFICATION ASSESSMENT RECORD

Technician	Boyd Harvey		
Test Method	RT	SNT Certification Level	III
	UT		I
	MT		II
	PT		II

CERTIFICATIONS

Standard	Method	Level	Date	Recertification Date	Expiry
SNT-TC-1A	RT	III	August 2009	March 2010	December 2015
SNT-TC-1A	MT	II	March 2007	March 2010	December 2015
SNT-TC-1A	PT	II	March 2007	March 2010	December 2015
SNT-TC-1A	UT	I	March 2007	March 2011	December 2015

RELATED CERTIFICATIONS

Standard	Method	Level	Sector	Date	Expiry	Reg. No.
CGSB	RT	III	EMC	August 2009	December 2015	5584
CGSB	MT	II	EMC	December 1992	December 2015	5584
CGSB	UT	I	EMC	March 2001	December 2015	5584
CGSB	PT	II	EMC	June 2005	December 2015	5584

RELATED WORK EXPERIENCE

EMPLOYER	DESCRIPTION	START DATE	END DATE
Echo NDE Inc.		2007	
Cave Inspection		1996	2007
Hibernia Topsides Project		1994	1996
Eastern Technical Inspection		1993	1994

EXAMINATION RECORD

TESTING ORGANIZATION	EXAM	DATE	GRADE %	PASS/ FAIL	PRACTICAL AUDIT COMPLETE
Echo NDE Inc.	RT	March 2007	100	P	X
Echo NDE Inc.	MT	March 2007	100	P	X
Echo NDE Inc.	PT	March 2007	100	P	X
Echo NDE Inc.	UT	March 2007	100	P	X

VISION ACUITY

Vision testing is required on an annual basis. The test shall be in accordance with Echo NDE Inc.'s procedure manual. This statement is accurate and current only when accompanied by a properly completed acuity and colour test, and clearly indicating acceptable vision. Refer to individual's related eye examinations, both vision and colour.

Approved: _____

Jeff Leedahl, President

EMPLOYEE PRACTICAL DEMONSTRATION/AUDIT

Technician	Boyd Harvey		
Test Method	RT	SNT Certification Level	III

PROFICIENCY CHECKLIST

	Yes (√)
1. Technician satisfactorily completed Echo NDE Inc. specific procedure quiz?	√
2. Technician satisfactorily demonstrated inspection as per noted Echo NDE procedure?	√
3. Technician has an understanding of the specific code & specification?	√
4. Technician demonstrated a proper interpretation as per required code & specification?	√
5. Correct Echo NDE procedure listed on report?	√
6. Inspection Report(s) contain all specific technical information?	√
7. Details of examination are clear on inspection reports	√
8. Technician has listed a clear description of inspection and results?	√
9. Technician has signed all records with applicable certifications listed?	√
10. Where applicable all repairs have been noted clearly on test piece(s)	√

ACCEPTANCE

The candidate above has satisfactorily demonstrated knowledge and technical competency of the specific NDE method and as it relates to Echo NDE Inc's Technical Procedure.

Approved: _____ Date: August 2009*

Darryl Coleman
SNT-TC-1A Level III

** Backdated to original SNT- TC-1A certification date*

EMPLOYEE PRACTICAL DEMONSTRATION/AUDIT

Technician	Boyd Harvey		
Test Method	UT	SNT Certification Level	I

PROFICIENCY CHECKLIST

	Yes (√)
1. Technician satisfactorily completed Echo NDE Inc. specific procedure quiz?	√
2. Technician satisfactorily demonstrated inspection as per noted Echo NDE procedure?	√
3. Technician has an understanding of the specific code & specification?	√
4. Technician demonstrated a proper interpretation as per required code & specification?	√
5. Correct Echo NDE procedure listed on report?	√
6. Inspection Report(s) contain all specific technical information?	√
7. Details of examination are clear on inspection reports	√
8. Technician has listed a clear description of inspection and results?	√
9. Technician has signed all records with applicable certifications listed?	√
10. Where applicable all repairs have been noted clearly on test piece(s)	√

ACCEPTANCE

The candidate above has satisfactorily demonstrated knowledge and technical competency of the specific NDE method and as it relates to Echo NDE Inc's Technical Procedure.

Approved: _____ Date: March 2007*

Darryl Coleman
SNT-TC-1A Level III

** Backdated to original SNT- TC-1A certification date*

EMPLOYEE PRACTICAL DEMONSTRATION/AUDIT

Technician	Boyd Harvey		
Test Method	MT	SNT Certification Level	II

PROFICIENCY CHECKLIST

	Yes (√)
1. Technician satisfactorily completed Echo NDE Inc. specific procedure quiz?	√
2. Technician satisfactorily demonstrated inspection as per noted Echo NDE procedure?	√
3. Technician has an understanding of the specific code & specification?	√
4. Technician demonstrated a proper interpretation as per required code & specification?	√
5. Correct Echo NDE procedure listed on report?	√
6. Inspection Report(s) contain all specific technical information?	√
7. Details of examination are clear on inspection reports	√
8. Technician has listed a clear description of inspection and results?	√
9. Technician has signed all records with applicable certifications listed?	√
10. Where applicable all repairs have been noted clearly on test piece(s)	√

ACCEPTANCE

The candidate above has satisfactorily demonstrated knowledge and technical competency of the specific NDE method and as it relates to Echo NDE Inc's Technical Procedure.

Approved: _____ Date: March 2007*

Darryl Coleman
SNT-TC-1A Level III

* *Backdated to original SNT- TC-1A certification date*

EMPLOYEE PRACTICAL DEMONSTRATION/AUDIT

Technician	Boyd Harvey		
Test Method	PT	SNT Certification Level	II

PROFICIENCY CHECKLIST

	Yes (√)
1. Technician satisfactorily completed Echo NDE Inc. specific procedure quiz?	√
2. Technician satisfactorily demonstrated inspection as per noted Echo NDE procedure?	√
3. Technician has an understanding of the specific code & specification?	√
4. Technician demonstrated a proper interpretation as per required code & specification?	√
5. Correct Echo NDE procedure listed on report?	√
6. Inspection Report(s) contain all specific technical information?	√
7. Details of examination are clear on inspection reports	√
8. Technician has listed a clear description of inspection and results?	√
9. Technician has signed all records with applicable certifications listed?	√
10. Where applicable all repairs have been noted clearly on test piece(s)	√

ACCEPTANCE

The candidate above has satisfactorily demonstrated knowledge and technical competency of the specific NDE method and as it relates to Echo NDE Inc's Technical Procedure.

Approved: _____ Date: March 2007*

Darryl Coleman
SNT-TC-1A Level III

** Backdated to original SNT- TC-1A certification date*

Color Contrast Differentiation Vision Examination

In accordance with the requirements of both SNT-TC-1A – 1996 and 2001 Editions, this test demonstrates the capability of distinguishing and differentiating contrast colors or shades of grey used in the method a determined by the employer.

*Examination for all RT, MT, UT, PT personnel
*Valid for three years
* All tests performed using binocular vision

Candidate's Name: Boyd Harvey **SNT-TC-1A Certification:** RTIII/MTII/PTII/UTI

Date of Examination: Jan 6 2014

Part A Shades of Grey

*Test examines for examination of shades of grey
*Using a 15 step Density strip, candidate is asked to identify all 15 steps

Step Number	Transmission Density	Identified
1	0.196	✓
2	0.301	✓
3	0.611	✓
4	0.919	✓
5	1.220	✓
6	1.520	✓
7	1.810	✓
8	2.120	✓
9	2.410	✓
10	2.710	✓
11	3.010	✓
12	3.290	✓
13	3.590	✓
14	3.860	✓
15	4.170	✓

ECHO NDE

Part B Color Identification

*Test examines for Tritanomaly (sensitivity of blue / yellow colors), Protanomaly (loss of red colors), Deutaranomaly (loss of green colors).
*Using the Farnsworth D15 Reference Discs, each candidate is asked to place 15 numbered discs in order of hue.
*Below is a copy of the Score Sheet Template. If the lines remain along the outside of the circle (few chips out of order) the candidate is deemed normal, confusions among color discs that are close together in hue are not considered significant and that one or two crossings are normal.
*The type of color Vision defect is determined by comparing crossover lines to see if they are parallel to the protan, deutan or tritan color confusion axis'.

Binocular Test 1

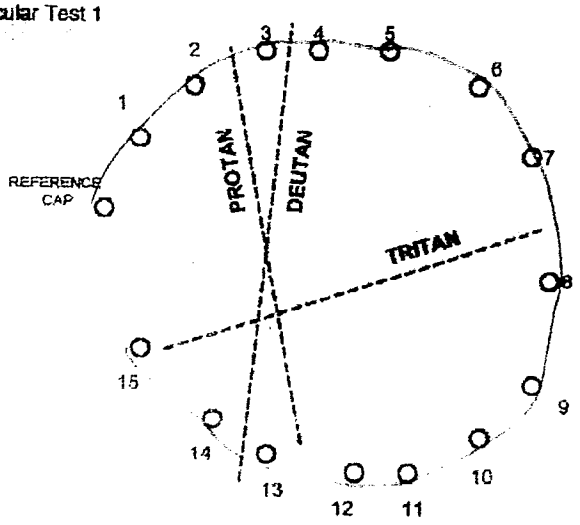

Binocular Re-Test

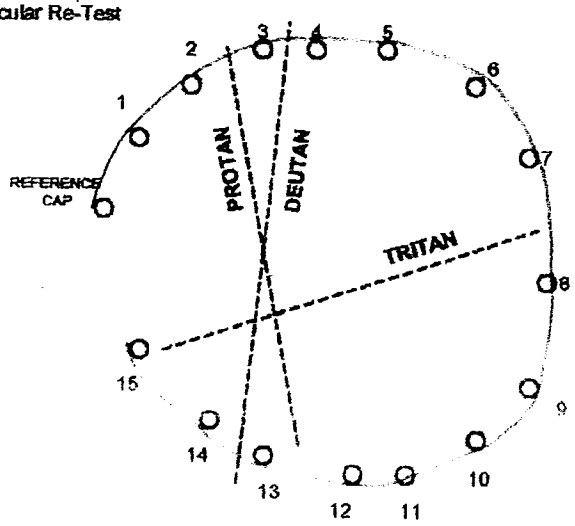

RESULTS		
Part A Shades Of Grey	PASS	FAIL
Part B Color Differentiation	PASS	FAIL

Comments: _____

I confirm that the above mentioned candidate can distinguish and differentiate contrast between the above mentioned colors and/or shades of grey used in the NDT method concerned

Trisha Russell
Examiner's Name / Title (Print)

Examiner's Signature

Employee Signature

Jan 6 2014
Date of Examination

Natural Resources Canada | Ressources naturelles Canada



Name/ Nom: **Joel S. Cressey**

Reg. No./ No. matricule: **17325**

Issue Date/ Date d'émission: **2014/10/07**

This card does not identify the stated individual to be an employee or representative of Natural Resources Canada, Government of Canada. Cette carte n'identifie pas l'individu d'être un employé ou un représentant de Ressources naturelles Canada, Gouvernement du Canada.

Corrective lenses for | | near | | far vision.

Verres correctifs pour la vision de | | près | | distance.

Signature |

Natural Resources Canada | Ressources naturelles Canada

[illegible] **17325**

Method Methode	Level Niveau	Sector Secteur	Cert. Date Date cert.	Date recert. Date recert.	Expires Expiration
RT	2	EMC	2014/10/07		2017/12/31

For verification of certification status, policies and definitions, visit website: http://ndt.nrcan.gc.ca/ Pour la vérification de la certification, les politiques, et les définitions, visitez le site web: http://ndt.nrcan.gc.ca/

Manager, Certifying Agency
Gestionnaire, Commission de certification

Joel Stanley Cressey
17325
Registration Number
Numéro de matricule



is certified by the Canadian Nuclear Safety Commission as an Exposure Device Operator.

est accrédité par la Commission canadienne de sûreté nucléaire à titre d'opérateur d'appareil d'exposition.

2013/02/01	2017/04/01	
Issue Date Date d'émission	Expiry Date Date d'expiration	Designated Officer Fonctionnaire désigné

Canadian Nuclear Safety Commission | Commission canadienne de sûreté nucléaire | Canada

---

ECHO NDE

Echo NDE Inc.
59 Burnt Park Drive / Red Deer, AB / T4P 0J7

This is to certify that: *Joel Cressey*

Is certified as an SNT-TC-1A Level II in RT

Issue Date: October 2014 Expiry: October 2017

Joel Cressey

Darryl Coleman,
SNT-TC-1A Level III

Natural Resources Canada | Ressources naturelles Canada

Canada

NRCAN EYE EXAMINATION REPORT - NDT PERSONNEL

Three vision assessments may be required: Near Vision, Distance Vision (visual testing method only) and Colour Vision (initial certification only). This form must be completed and returned to the NDT Certifying Agency when applying for examination in any NDT method, renewal of certification or recertification.

CANDIDATE'S NAME: Joel Cressey REGISTRATION NUMBER: 17305

Near Vision and Distance Vision – to be completed by medically recognized personnel (ophthalmologist, optometrist, physician, nurse, etc.)

Near vision acuity: **shall permit reading Times Roman N4.5 (Jaeger number 2) or equivalent letters at not less than 30 cm with one or both eyes, either corrected or uncorrected.**

I CONFIRM THAT THE CANDIDATE:
(Please check ☑ one)
- ☑ Meets the requirement without correction
- ☐ Meets the requirement with correction
- ☐ Does not meet the requirement

Distance vision acuity: **(required only for the visual testing method) shall equal Snellen Fraction 20/30 or better in at least one eye, either corrected or uncorrected.**

I CONFIRM THAT THE CANDIDATE:
(Please check ☑ one)
- ☑ Meets the requirement without correction
- ☐ Meets the requirement with correction
- ☐ Does not meet the requirement

Dr Stew Topley — Examiner's Name (Please Print/Type)

Examiner's Signature

Optometrist — Appointment/Title

2014/11/15 — Date of Eye Examination yyyy/mm/dd

Colour Vision (required only for initial certification, not for renewal or recertification)
- to be completed by medically recognized personnel or the employer or certified level 3 NDT personnel.

NOTE: A candidate who passes an Ishihara test (short or long) is acceptable. As an alternative or in case of a failure of an Ishihara test, the employer or Level 3 NDT personnel may administer a performance test to confirm if the candidate can see flaw indications that are typical of the method. Example: In liquid penetrant, confirm that the candidate can see red indications on a white background and fluorescent-green indications on a variety of backgrounds.

I CONFIRM THAT THE CANDIDATE CAN DISTINGUISH CONTRAST BETWEEN THE COLOURS USED IN THE NDT METHOD(S) CONCERNED AS SPECIFIED BY THE EMPLOYER (OR PASSED AN ISHIHARA TEST).

Cindi Supizak — Examiner's Name (Please Print/Type)

Examiner's Signature

Optometric Assistant — Appointment/Title

2014/11/15 — Date of Eye Examination yyyy/mm/dd

NOTE: PROVINCIAL HEALTH CARE PROGRAMS MAY NOT COVER THE COST FOR AN EYE EXAMINATION

EMPLOYEE QUALIFICATION ASSESSMENT RECORD

Technician Joel Cressey

Test Method RT SNT Certification Level II

INITIAL CERTIFICATIONS

Standard	Method	Level	Initial Certification Date	Latest Recertification Date	Expiry
SNT-TC-1A	RT	II	October 2014		October 2017

RELATED CERTIFICATIONS

Standard	Method	Level	Sector	Date	Expiry	Reg. No.
CGSB	RT	II	EMC	October 2014	December 2017	17325

RELATED WORK EXPERIENCE

EMPLOYER	DESCRIPTION	START DATE	END DATE
Echo NDE Inc.	NDE TECHNICIAN	2012	

EXAMINATION RECORD

TESTING ORGANIZATION	EXAM	DATE	GRADE %	PASS/ FAIL	PRACTICAL AUDIT COMPLETE
Echo NDE Inc.	RT	October 2014	100	P	X

VISION ACUITY/COLOR CONTRAST DIFFERENTATION

Vision acuity testing is required on an annual basis, color differentiation is required every three (3) years. The test shall be in accordance with Section 9.0 of Echo NDE Inc.'s Written Practice. Refer to individual's related eye examinations, both vision and colour.

SNT-TC-1A CERTIFICATION STATEMENT

Based upon demonstrated training as evidenced by valid CGSB certification, work experience, successful Practical Demonstration and valid vision requirements set out by Echo NDE Inc's Written Practice and the guidelines set out by SNT-TC-1A the candidate meets the requirements for SNT-TC-1A certification.

This statement is accurate and current only when accompanied by CGSB certification, vision acuity and colour test and a completed Practical Demonstration.

Approved: _____ Date: October 2014

Darryl Coleman
SNT-TC-1A Level III

EMPLOYEE PRACTICAL DEMONSTRATION/AUDIT

Technician	Joel Cressey		
Test Method	RT	SNT Certification Level	II

PROFICIENCY CHECKLIST

	Yes (√)
1. Technician satisfactorily completed Echo NDE Inc. specific procedure quiz?	√
2. Technician satisfactorily demonstrated inspection as per noted Echo NDE procedure?	√
3. Technician has an understanding of the specific code & specification?	√
4. Technician demonstrated a proper interpretation as per required code & specification?	√
5. Correct Echo NDE procedure listed on report?	√
6. Inspection Report(s) contain all specific technical information?	√
7. Details of examination are clear on inspection reports	√
8. Technician has listed a clear description of inspection and results?	√
9. Technician has signed all records with applicable certifications listed?	√
10. Where applicable all repairs have been noted clearly on test piece(s)	√

ACCEPTANCE

The candidate above has satisfactorily demonstrated knowledge and technical competency of the specific NDE method and as it relates to Echo NDE Inc's Technical Procedure.

Approved: _____
Darryl Coleman
SNT-TC-1A Level III

Date: October, 2014

EMPLOYEE RECERTIFICATION RECORD

Technician	Joel Cressey		
Test Method	RT	SNT Certification Level	II

CERTIFICATION LOG

Standard	Method	Level	Details	Issue Date	Expiry
SNT-TC-1A	RT	II	Certification	October 2014	October 2017

SNT-TC-1A RECERTIFICATION STATEMENT

Based upon retaining valid CGSB certification, continued relevant work experience, successful current Practical Demonstration (which is evidence of continuing satisfactory technical performance) and valid vision requirements set out by Echo NDE Inc's Written Practice and the guidelines set out by SNT-TC-1A the candidate meets the requirements for SNT-TC-1A recertification.

This statement is accurate and current only when accompanied by CGSB certification, vision acuity and colour test and a completed Practical Demonstration.

Approved: _____ Date: : October 2014

Darryl Coleman
SNT-TC-1A Level III

Color Contrast Differentiation Vision Examination

In accordance with the requirements of both SNT-TC-1A – 1996 and 2001 Editions, this test demonstrates the capability of distinguishing and differentiating contrast colors or shades of grey used in the method a determined by the employer.

*Examination for all RT, MT, UT, PT personnel
*Valid for three years
* All tests performed using binocular vision

Candidate's Name: Joel Cressey **SNT-TC-1A Certification:** RT II

Date of Examination: Oct 22 /14

Part A Shades of Grey

*Test examines for examination of shades of grey
*Using a 15 step Density strip, candidate is asked to identify all 15 steps

Step Number	Transmission Density	Identified
1	0.196	✓
2	0.301	✓
3	0.611	✓
4	0.919	✓
5	1.220	✓
6	1.520	✓
7	1.810	✓
8	2.120	✓
9	2.410	✓
10	2.710	✓
11	3.010	✓
12	3.290	✓
13	3.590	✓
14	3.860	✓
15	4.170	✓

Part B Color Identification

*Test examines for Tritanomaly (sensitivity of blue / yellow colors), Protanomaly (loss of red colors), Deutaranomaly (loss of green colors).
*Using the Farnsworth D15 Reference Discs, each candidate is asked to place 15 numbered discs in order of hue.
*Below is a copy of the Score Sheet Template. If the lines remain along the outside of the circle (few chips out of order) the candidate is deemed normal, confusions among color discs that are close together in hue are not considered significant and that one or two crossings are normal.
*The type of color Vision defect is determined by comparing crossover lines to see if they are parallel to the protan, deutan or tritan color confusion axis'.

Binocular Test 1

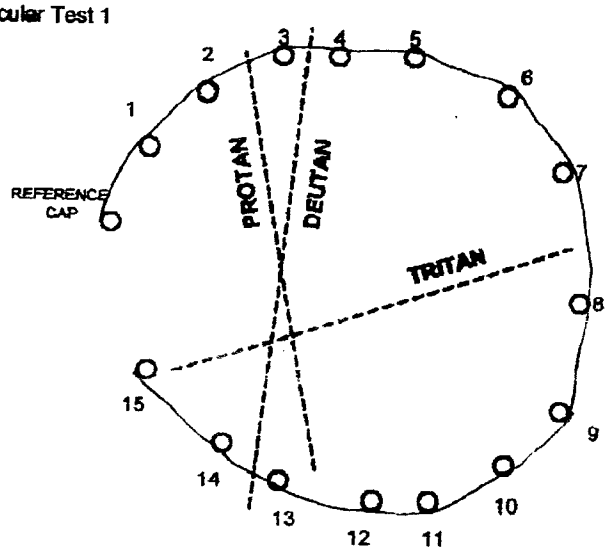

Binocular Re-Test

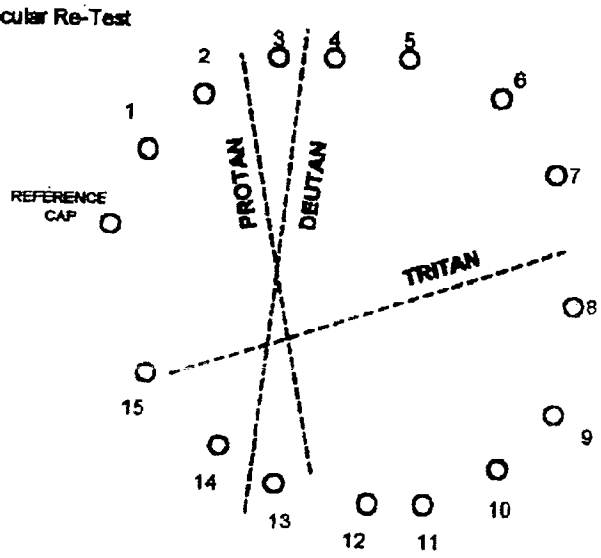

RESULTS

Part A Shades Of Grey	(PASS)	FAIL
Part B Color Differentiation	(PASS)	FAIL

Comments: _____

I confirm that the above mentioned candidate can distinguish and differentiate contrast between the above mentioned colors and/or shades of grey used in the NDT method concerned

Trisha Russell / Safety Manager
Examiner's Name / Title (Print)

Examiner's Signature

Employee Signature

Oct 22 / 14
Date of Examination

ENLYN
enlyn.com

Pressure Test Report

EXHIBIT 16.2

Job No: 14-561-01 Serial Number: 1456101 A #: 640 432

Description: 2MM BTU/HR LINE HEATER coil

Drawing Number and Revision Level

14-561-01-C Rev 2

Item(s) MAWP 3125 PSIG [ ] 1.1x MAWP [ ] 1.3x MAWP [x] 1.5x MAWP

[x] Hydrostatic Test [ ] Pneumatic Test Test Medium: H2O

Required Test Pressure: 4688 PSIG MDMT: Minus 20 F Required Duration: 20 Minute

Actual Pressure: 4688 PSIG Ambient Temp: 10°C Actual Duration: 20 Minute

Test Gauge ID	Gauge Range	Calibration Expiry Date
EP 16	0-10,000 PSI	10/30/2015
EP 17	0 - 10,000 PSI	10/30/2015
Chart Recorder ID	**Chart Recorder Range**	**Calibration Expiry Date**

Comments:

Enlyn Inspector	[signature]	Date:	Feb 03/2015
Owners Inspector		Date:	
Authorized Inspector	[signature]	Date:	3 Feb 2015

King's ENERGY SERVICES LTD

Job#66910

277 Burnt Park Drive
Red Deer County, AB
T4S 2L4

Ph. 403-343-2822
Fax 403-347-1470
Email:info@kingsenergy.com
Web: www.kingsenergy.com

PRESSURE GAUGE VERIFICATION TEST CERTIFICATE

This gauge has been calibrated by adjusting the instrument or compiling a deviation chart so that its reading can be correlated to the actual value being measured

We certify that the gauge identified below has been verified with precise test equipment and the variance has been recorded in the table below.

MODEL AND RANGE: 4" - Gaugetech - 0-10000 PSI

GAUGE No.: EP-16 Company: Enlyn Corp

Temperature at time of Calibration: 20C

INDICATED VALUE		DIGITAL READINGS		VARIANCE 1% Full Scale		
1000	psi	998	psi	-2	psi	-0.02%
2000	psi	2028	psi	28	psi	0.28%
3000	psi	3031	psi	31	psi	0.31%
4000	psi	4018	psi	18	psi	0.18%
5000	psi	5030	psi	30	psi	0.30%
6000	psi	6057	psi	57	psi	0.57%
7000	psi	7045	psi	45	psi	0.45%
8000	psi	8043	psi	43	psi	0.43%
9000	psi	9100	psi	100	psi	1.00%
10000	psi	10100	psi	100	psi	1.00%

TECHNICIAN: Mike Semaroglou DATE: 10/30/2014

The above instrument was compared to a King's Crystal 10KPSIXP2I Digital Test Gauge serial # 547063 which was compared to a Chandler Deadweight model 5-145, serial # 12/95-18KMS #5 Deadweight tester traceable through Institute for National Measurement Standards (I.N.M.S) Canada.

Signature:

Job#66910

277 Burnt Park Drive
Red Deer County, AB
T4S 2L4

Ph. 403-343-2822
Fax 403-347-1470
Email:info@kingsenergy.com
Web: www.kingsenergy.com

PRESSURE GAUGE VERIFICATION TEST CERTIFICATE

This gauge has been calibrated by adjusting the instrument or compiling a deviation chart so that its reading can be correlated to the actual value being measured

We certify that the gauge identified below has been verified with precise test equipment and the variance has been recorded in the table below.

MODEL AND RANGE: 4" - Gaugetech - 0-10000 PSI

GAUGE No.: EP-17 Company: Enlyn Corp

Temperature at time of Calibration: 20C

INDICATED VALUE		DIGITAL READINGS		VARIANCE 1% Full Scale		
1000	psi	997	psi	-3	psi	-0.03%
2000	psi	2066	psi	66	psi	0.66%
3000	psi	3085	psi	85	psi	0.85%
4000	psi	4088	psi	88	psi	0.88%
5000	psi	5052	psi	52	psi	0.52%
6000	psi	6068	psi	68	psi	0.68%
7000	psi	7057	psi	57	psi	0.57%
8000	psi	8080	psi	80	psi	0.80%
9000	psi	9058	psi	58	psi	0.58%
10000	psi	10074	psi	74	psi	0.74%

TECHNICIAN: Mike Samaroden DATE: 10/30/2014

The above instrument was compared to a King's Crystal 10KPSIXP4 Digital Test Gauge serial # 547063 which was compared to a Chandler Deadweight model 5-145, serial # 12/95-18KMS #5 Deadweight tester traceable through Institute for National Measurement Standards (I.N.M.S) Canada.

Signature:

ENLYN
PROCESS SYSTEMS

AFFIDAVIT OF PNEUMATIC TEST

DATE: FEB 5/2015

JOB # 14-561-01

SERIAL NUMBER: 1456101

ORIG MAN: ENLYN PROCESS

OEM SER #:

DESCRIPTION: 2 MIL BTU LINE HEATER

TAG #

TESTING AGENT: AIR

TEST PRESSURE: 2.5 LBS

TEMPERATURE: 15° C

HOLD PERIOD: 15 MINS

GAUGE# EP-31

COMMENTS:

AUTHORIZED SIGNATURE
QUALITY CONTROL

CLIENT REPRESENTATIVE

Job#66910

277 Burnt Park Drive
Red Deer County, AB
T4S 2L4

Ph. 403-343-2822,
Fax 403-347-1470
Email:info@kingsenergy.com
Web: www.kingsenergy.com

PRESSURE GAUGE VERIFICATION TEST CERTIFICATE

This gauge has been Calibrated by adjusting the instrument or compiling a deviation chart so that its reading can be correlated to the actual value being measured

We certify that the gauge identified below has been Verified with precise test equipment and the variance has been recorded in the table below.

MODEL AND RANGE: 2.5" - Western Gauge - 0-5PSI

GAUGE No.: EP-31 **Company: Enlyn Corp**

Temperature at time of Calibration: 20C

INDICATED VALUE		DIGITAL READINGS		VARIANCE 3/2/3% Full scale		
0	psi	0.00	psi	0	psi	0.00%
1	psi	0.98	psi	-0.02	psi	-0.40%
2	psi	2.07	psi	0.066	psi	1.32%
3	psi	3.06	psi	0.06	psi	1.20%
4	psi	4.01	psi	0.006	psi	0.12%
5	psi	5.12	psi	0.119	psi	2.38%

TECHNICIAN: **Mike Samaroden** DATE: **10/30/2014**

The above instrument was compared to Kings Crystal IS33 Gauge
serial # 2262-637546 which is
traceable through Institute For National Measurement Standards (I.N.M.S) Canada.

Signature:

ENILYN
enlyn.com

HEAT TREATMENT INSTRUCTIONS

CUSTOMER: NuVista Energy		**DATE:**			
COMPONENT DESCRIPTION:		**2MM BTU/HT LINEHEATER COIL**			
JOB# & S/N OR LINE NO.	DIAMETER	THICKNESS	MATERIAL	LENGTH	WEIGHT
14-560-01 S/N 1456101	3"	0.438"	SA106B/SA105N/SA234WPB	299.1"	

TYPE OF HEAT TREATMENT	PRESSURE VESSEL PWHT		PIPING PWHT	X	BAKE OUT		

HEATING

Temperature to be raised from ~~200°f (95°c)~~ 800 °F TO 1150 °F _____ ° C at a maximum rate of 400 °F _____ ° C per hour. NOTE: THIS VALUE MUST NEVER EXCEED 400°F (222°C) PER HOUR

[Calculated rate = 400 F/hr. (222° C/hr.) divided by the maximum metal thicknessof the shell or head plate in inches]

HOLDING

Temperature to be held at a minimum of 1150 °F _____ ° C for 60Minute minutes.

[Holding time to be determined by Table UCS-56 for nominal thickness as specified in UW-40(f)]

COOLING

Temperature to be lowered from 1150 °F _____ ° C to ~~200°F (95°C)~~ 800 °F at a maximum rate of 500 °F _____ ° C per hour. NOTE: THIS VALUE MUST NEVER EXCEED 500°F (278°C) PER HOUR

[Calculated rate = 500° F/hr. (278 C/hr.) divided by the maximum metal thicknessof the shell or head plate in inches]

From 800°F (427°C) ietms may be cooled in still air.

ADDITONAL REQUIREMENTS

- Job number and description required on heat treatment charts along with the operator's signature & date
- Reporting of thermocouple attachment method and location, and verification of furnace thermocouple calibration is required
- A sufficient number of thermocouples shall be located to control and maintain uniform distribution of temperature on all vessels and parts. Thermocouples shall be directly attached to the item or provision shall be made for thermocouple placement at bottom, centre and top of the furnace charge in accordance with the ASME Code.
- During the heating period, there shall not be a greater variation in temperature throughout the portion of the vessel being heated than 250°F (139°C) within any 15 ft. (4.6 m) interval of length. An adequate number of thermocouples must be used to ensure this Code requirement is met. This limitation is also applicable to the temperature variations between the different thicknesses of various vessel components
- During the holding period, there shall not be a greater difference than 150°F (83°C) between the highest and lowes temperature throughout the portion of the vessel being heat treated, except where the range is further limited by these instructions
- If Capacitor Discharge welding is used to attach thermocouples an ASME Code Section IX Welding Procedure Specification is required (WELDING PROCEDURE SPECIFICATION qualification is not required), and the energy output must be limited to 125 Watt-Seconds. No other welding is permitted on vessels or parts. [0.5 X Capacitance in farads X Voltage^2 = W-Sec.]
- The method of thermocouple removal shall not damage the heat treated item.

Quality Control Inspector Signature: _____

Thermocouple Attachment Method: CAPACITOR DISCHARGE

Furnace Heater Number: BF32-15-048

Furnace Operator Signature: _____

On Coil **1456102** TC# 3 Top, TC#8 Middle, TC#9 Bottom. Coil **1456101** TC# 4 Top, TC#5 Middle, TC#6 Bottom. Vessel **V14348200** TC# 10 top 2" from head seam, TC# 11 middle, TC# 12 bottom 2" from head seam
January 30, 2015

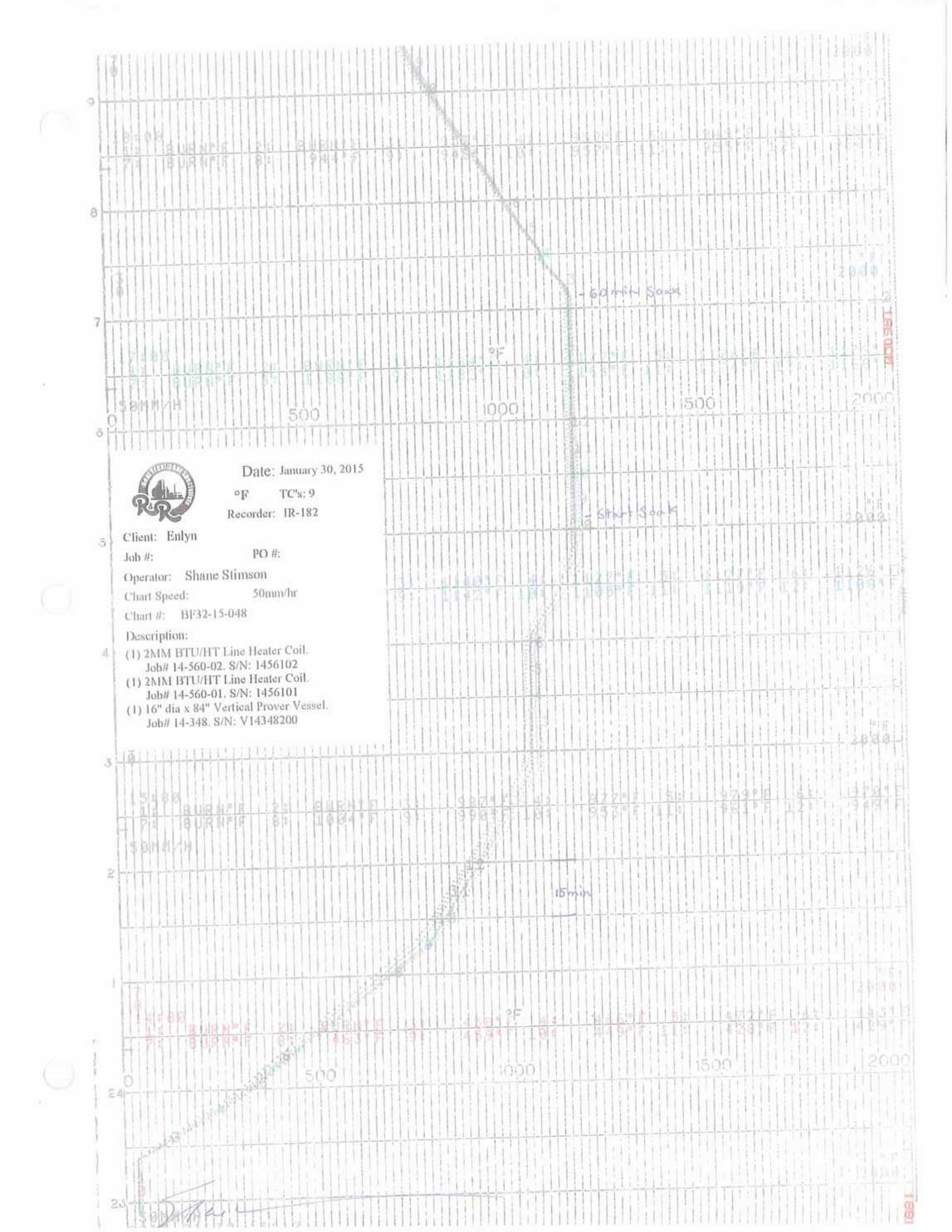
Date: January 30, 2015
°F TC's: 9
Recorder: IR-182
Client: Enlyn
Job #:
PO #:
Operator: Shane Stimson
Chart Speed: 50mm/hr
Chart #: BF32-15-048
Description:
(1) 2MM BTU/HT Line Heater Coil.
Job# 14-560-02. S/N: 1456102
(1) 2MM BTU/HT Line Heater Coil.
Job# 14-560-01. S/N: 1456101
(1) 16" dia x 84" Vertical Prover Vessel.
Job# 14-348. S/N: V14348200
60min Soak
Start Soak
15min
°F
50MM/H
0
500
1000
1500
2000

R & R Stress Relieving Service Ltd.
Nisku: 2103 – 6th Street, T9E 7X8 **Tel:** (780) 955-7559 **Fax:** (780) 955-2903
Blackfalds: #15 Burbank Industrial Park **Tel:** (403) 885-2280 **Fax:** (403) 885-0177
Toll Free: 1-800-499-HEAT(4328)

CERTIFICATE OF CONFORMANCE OF RECORDING INSTRUMENTS

CERTIFIED BY:	R & R Stress Relieving Service Ltd.
TEST NUMBER:	RR1014
DATE:	January 6, 2015
DATE DUE:	April 6, 2015
INSTRUMENT MFG:	Chino
MODEL NUMBER:	AH-3725 N00
SERIAL NUMBER:	AH-059C172
RECORDER NUMBER:	IR-182

This instrument has been calibrated and it is within the manufacturers specifications.

REFERENCE STANDARDS

DIGI MITE 311600 S/N48430-5522 Certification Date: 12/11/14

The calibration of all standards and measuring instruments used in the calibration are traceable to the National Research Council of Canada in Ottawa or to the National Bureau of Standards in Washington, D.C.

Shane Stimson

Taylor Valve Technology
8300 Southwest 8th Street
Oklahoma City, Oklahoma
telephone 405 787 0145 facsimile 405 789 8198
email: info@taylorvalve.com

Serial # : **038480-43**
Part#: **82E4351311**
Date : 29-Jan-15
Sales Order # : 038480

Customer : **ENLYN CORP**
5509 BROADWAY AVE
BLACKFALDS, AB
T0M - 0J0

Customer PO # : 14-561-01-03

Safety Relief Valve Certification

Taylor Valve Technology, Inc. Safety Relief Valves are designed, manufactured and tested in accordance with the provisions of the ASME Boiler and Pressure Vessel Code. as allowed for within the provisions of ASME. The published relieving capacities have been certified by the National Board of Boiler and Pressure Vessel Inspectors.

Valve Specifications

Model Number :	Taylor Model 8200 Soft Seat	Orifice :	E	
Body Size :	1 Inch	Diameter:	0.520	Inches
Part Number :	82E4351311	Area :	0.212	In^2
Body Configuration :	1" MNPT X 1" FNPT	Temperature :	70	°F
		Spring Range :	101-225	PSIG
		Set Pressure :	150.0	PSIG
CRN:	0G01316.2C			

Materials

Body :	WCC Carbon Steel	Spring :	17.7 PH Stainless Steel
Seat Frame :	Carbon Steel	Guide :	304 Stainless Steel
Seat Housing :	17-4 PH H900 Stainless Steel	Adj Screw :	Carbon Steel with EN Plating
Trim :	Standard	Options :	None
Seat :	FKM 90d		

Set Pressure Specifications

	ASME Units	
Set Pressure :	150.0	psig
ASME High Set Limit :	154.5	psig
ASME Low Set Limit :	145.5	psig

ASME (90%) rated capacity at set pressure for indicated fluid, specific gravity and temperature

Certifying Fluid : Air 582 SCFM Spec Gravity : 1.00 Temp : 60 °F

Tested by :

Department : **Manufacturing** *Signed* _____

Approved by :

Department : **Engineering** *Signed* _____

ENLYN

Fuel Gas Scrubber Index

1. ABSA Certification of Inspection permit
2. Travel Sheet
3. AB-25
4. Name Plate
5. CRN
6. Drawing
7. WPS and Welder Qualification
8. Pressure testing
9. MTRS

ENLYN
enlyn.com

Fuel Gas Scrubber Index

1. ABSA Certification of Inspection permit

Certificate of Inspection Permit

ENLYN CORP

PO BOX 726

RED DEER, AB
T4N 5H2

Max. Inspection Interval: 1.00 Yr
Year Built: 2015
CRN: W3746.2
Serial #: VE381100
Volume: 0.016 M3
Heating Surface:
Surface Area:

COMPANY CODE:
DESCRIPTION: SCRUBBER
LOCATION: STOCK, BLACKFALDS
MANUFACTURER: ENLYN CORP

PART	MAX. ALLOWABLE PRESSURE	MAX. TEMP	MIN. TEMP	Pressure Relief Valves VALVE ID	SETTING	CAPACITY	LOCATION
VESSEL	1965 KPA	38 C	-29 C	SV1			TO BE INSTALLED

Terms and Conditions:

Owner must ensure an integrity assessment of this vessel/boiler is conducted after it is installed but prior to its operation. The integrity assessment shall be conducted by a person holding qualifications acceptable to the Administrator. Refer to ABSA publications AB-506, AB-512 and AB-515 for details about qualifications acceptable to the Administrator.

Owner must ensure this vessel/boiler is designed, constructed, installed, operated, maintained and decommissioned in accordance with the Safety Codes Act and Regulations.

Owner must ensure this vessel/boiler has overpressure protection that is a relief valve that meets the requirements of the ASME Code, or other means accepted by the Administrator expressly for this item.

Permit Issued by: TWOREK, JOE **Signature:** J. Twork

NOTE: REQUIREMENTS OF THE SAFETY CODES ACT AND THE REGULATIONS ISSUED THEREUNDER:

. owner or vendor must notify the Administrator in writing when the pressure equipment identified on this certificate is sold or otherwise disposed of.

The owner or person in charge shall report all accidents involving Pressure Equipment to the district Safety Codes Officer immediately and shall send a full report in writing to the Administrator as required by the Act. No repairs or alterations may be made unless authorized by a Safety Codes Officer.

ABSA: 304, 4406 Gaetz Avenue, Red Deer, AB, T4N 3Z6 ☎ (403) 341-6677

ENLYN

enlyn.com

Fuel Gas Scrubber Index

2. Travel Sheet

9.5 TRAVEL SHEET (FRONT)

DO NOT START CONSTRUCTION WITHOUT AI REVIEW — TRAVEL SHEET REVISION NO.:0

AI REVIEW: JMM — REVIEW DATE: 01/14/15

SERIAL NO.: VE381100 — JOB NO.:E-381 — VESSEL TYPE: 6-5/8"X36" SCRUBBER

DRAWING NO.:E-381-A-1 — DWG. REVISION NO.: 130 — TRAVEL SHEET INITIATION BY: Mark Rajher

Seq.	Item	Comments	Q.C.I.	Date	A.I. Hold Points	A.I.	Date	Owner	Date
1.	Calculations in File		MW	01/14/15	A	JMM	01/14/15		
2.	Release of App'd Dwg.				A		2-6-15		
3.	Materials Examined		MW	01/14/15					
4.	Heat Numbers Recorded				A		2-6-15		
5.	MTRs Checked		MW	01/14/15	A		2-6-15		
6.	WELDING PROCEDURE SPECIFICATION(s) Checked		MW	01/14/15	A		2-6-15		
7.	Welder(s) Qualified		MW	01/14/15	A		2-6-15		
8.	Thicknesses Verified & Recorded		[illegible]	01/21/15					
9.	Shell(s) & Head(s) Fit-up Inspection		[illegible]	01/24/15	A		2-6-15		
10.	Nozzles & Fittings Fit-up Inspection		[illegible]	01/24/15	A		2-6-15		
11.	Nozzle Orientation		[illegible]	01/24/15					
12.	Nozzle & Flange Rating Checked		[illegible]	01/24/15	A		2-6-15		
	Impact Tests		—	—			2-6-15		
14.	Internals Checked	Less top M	[illegible]	01/30/15	A A		2-6-15		
15.	Final Internal Inspection	Shell Side / Tube Side Type 1	[illegible]	01/30/15	A		2-6-15		
16.	Weld Sizes Checked		[illegible]	01/30/15	A		2-6-15		
17.	Welder I.D. Checked		[illegible]	01/30/15	A		2-6-15		
18.	Final External Inspection		[illegible]	02/04/15	A		2-6-15		
19.	Radiography		—	—					
20.	Other N.D.E.		—	—					
21.	Final Ext. Prior to P.W.H.T.			—					
22.	PWHT Chart Checked								
23.	Hydrostatic Test	Shell Side Gauge # EP10 / Tube Side Gauge # EP26	[illegible]	02/06/15	A A		2-6-15		
24.	CRN Drawing	CRN#W3742 213			A		2-6-15		
25.	N.C.R. #								
26.	Nameplate Stamping		[illegible]	02/06/15	A		[illegible]		
27.	Manuf. Data Report Completed & Verified				A A		[illegible]		
28.	Nameplate Installation		MW	02/06/15					

Denotes an A.I. Inspection Point ** Denotes an A.I. Hold Point

A Insp opening + other mark ups

Rev. 1 — Approved by: Quality Control Manager

EXHIBIT9.6 TRAVEL SHEET (BACK)

MATERIAL THICKNESS VERIFICATION AND IDENTIFICATION				WELD I.D. / WELDER SYMBOLS / FIT-UP						
Description	Thickness	Material Spec. & Grade	Heat & Plate Identifier or I.D. Number	Weld I.D.	Welder Symbol	Fit-Up Exam	Weld I.D.	Welder Symbol	Fit-Up Exam	Verify Type 1 Joint
Shell #1	0.265"	SA106B	1322475					L		
Head #1	0.291"	SA234WPB	57B30016				C –	L		
Base Plate	0.764"	SA516-70N	M20062				C –	L		
Name plate bracket	0.375"	SA36	SE14105521				C –	L		

ATTACHMENT AND / OR NOZZLE MATERIAL THICKNESS VERIFICATION AND IDENTIFICATION						WELDER SYMBOLS / FIT-UP			
Mark	Mat. I.D.	Neck	Fitting	Flange	Repad or Attachment	Cat. B	Cat. C	Cat. D	Pad OD
C1	Spec.-Grd.		SA105N					L	
	Thk./Rating		1"Class3000 TOL						
	Heat# or ID		VRSF						
C2	Spec.-Grd.		SA105N					L	
	Thk./Rating		1"Class 3000 TOL						
	Heat# or ID		VRSF						
C3	Spec.-Grd.		SA105N					L	
	Thk./Rating		2"Class 3000 Coupling						
	Heat# or ID		6882						
C4	Spec.-Grd.		SA105N					L	
	Thk./Rating		0.75"Class 6000 TOL						
	Heat# or ID		59538						

ENILYN
enilyn.com

Fuel Gas Scrubber Index

3. AB-25

Alberta Municipal Affairs
ABSA, the pressure equipment safety authority
9410 – 20th Avenue
Edmonton, AB T6N 0A4
Partial/ *Partiel* ☐

MANUFACTURER'S DATA REPORT FOR PRESSURE VESSEL
DÉCLARATION DE CONFORMITÉ DU CONSTRUCTEUR D'APPAREILS SOUS PRESSION

Upon shipment of a pressure vessel, this form fully and correctly filled in must be mailed to the office of the Chief Inspector in the province of installation in accordance with the regulations under the Act, governing the construction and installation of pressure vessels.

Au moment de l'expédition d'un appareil sous pression, ce formulaire complété correctement, doit être envoyé au bureau de l'inspecteur en chef de la province d'installation tel que prévu dans les règlements de la loi sur les appareils sous pression.

Manufactured by *Construit par*	Name and address of Manufacturer/ *Nom et adresse du constructeur* Enlyn Corp. (5509 Broadway Ave. Blackfalds Alberta Canada T0M 0J0)
Manufactured for *Construit pour*	Name and address of Purchaser or Consignee/ *Nom et adresse du client ou de son représentant* Enlyn Corp. (5509 Broadway Ave. Blackfalds Alberta Canada T0M 0J0)
Ultimate owner *Utilisateur*	Name and address/ *Nom et adresse* Stock Enlyn Corp. (5509 Broadway Ave. Blackfalds Alberta Canada T0M 0J0)
Location of installation *Lieu d'installation*	Address/ *Adresse* Stock Enlyn Corp. (5509 Broadway Ave. Blackfalds Alberta Canada T0M 0J0)

Pressure vessel/ *Appareil*

Type/ *Genre*	Overall Length/*Longeur totale*	Serial No./ *N° de série*	Year built/Année de fabrication
6-5/8"X36" SCRUBBER	36 in	VE381100	2015
Provincial Registration No. – C.R.N./*N° d'enregistrement provincial - N.E.C.*		National Board No./ *N° National Board*	Drawing No./ *N° de dessin*
W3746.213			CRN 4245 SHT1-2 Rev1

The chemical and physical properties of all parts meet the requirements of material specifications of the A.S.M.E. Code.
Les propriétés chimiques et physiques de toutes les composantes respectent les exigences des spécifications de matériaux de code ASME.

The design, construction and workmanship conform to CSA B51. *La conception, la construction et la façon sont conformes à ACNOR B51.*	ASME	Division	Addenda/*Supplément*	Code case No. *N ° de cas*
	Section VIII	1	2013	N/A

Manufacturer's partial data reports properly identified and signed by authorized inspectors have been furnished for the following items of the report, and attached to this report:

Rapports partiels du constructeur adéquatement identifiés et signés par les inspecteurs autorisés ont été produits pour les items suivants du rapport, et attachés à ce rapport:

Names of parts/ *Nom de la composante*	Item No./ *N° d'item*	Manufacturer's Name/ *Nom du constructeur*	Identifying Stamp/ *Estampe d'identification*
N/A	N/A	N/A	N/A
N/A	N/A	N/A	N/A

Shell/ *Virole*

Description	Material *Matériau*	Thickness *Épaisseur*	Corr. Allow. *Surépais. de corr.*	Diameter *Diamètre*	Longitudinal Joints *Joints longitudinaux*			P.W.H.T. *Traitement therm*		Girth Joints *Joints de circonférence*		Number of courses *Nombre de sections*
					Type	R.T. *Radiog.*	Efficiency *Efficacité*	Temp.	Time *Durée*	Type	R.T. *Radiog.*	
Shell 1	SA-106 B	0.280"	0.125"	6-5/8" OD	SMLS	N/A	85%	N/A	N/A	1	None	1

Heads/ *Tetes*

Description	Material *Matériau*	Min. Thickn. *Épais minim.*	Corr. Allow *Surép. Corr.*	Crown Radius *Rayon couron.*	Knuckle Radius *Petit rayon*	Ellipse Ratio *Rapp. ellipse*	Conical Apex Angle *Angle conique*	Hemisph. Radius *Ray. Hémisph*	Flat Diameter *Diam.plat*	Side to pressure *Côte sous pression*
H1 6-5/8"OD X 0.280"	SA-234-WPB	0.245"	0.125"	N/A	N/A	2:1	N/A	N/A	N/A	Concave
Flat Plate 10"X10"	SA516-70N	0.625"	0.125"	N/A	N/A	N/A	N/A	N/A	N/A	FLAT

Bolting (bolts removable utilized (does not cover attached))	Bolt Type / *Type Boulon*	Gasket	Gasket Dimension
Boulons amovible utilisés (décrits tout autre attaché) N/A	N/A	N/A	N/A

Pressure - Temperature/ *Pression - température*

Pressure Vessel Part *Partie de l'appareil*	Constructed for max. allowable working pressure *Construit pour une pression maximale de marche permise*	At max. temp. *A une temp. max.*	Min. Temp. (when less than -29°C) *Temp. min. (inférieure à -29°C)*	Test pressure (hydro-pneumatic or combination) *Pression d'épreuve (hydro-pneumatique ou combinaison)*
VESSEL	285 PSIG	100 F	- 20 F	373 psig

Tubes/ Chaudière et détails

Tube no. or Stays/ Tubulure ou étaye	Material/ Matériau	Diameter/ Diamètre	Nominal Thickness/ Épaisseur nominale	Qty. Attchs. Surépais. connexion	Attachment Mode d'attachement
N/A	N/A	N/A	N/A	N/A	N/A

Tube material/ Matériau des tubes	Diameter/ Diamètre	Nominal Thickness (gauge) Épaisseur nominale (calibre)	Number/ Fibre	Type (Straight or U) Type (Droit ou U)	Heating Surface Surface de chauffe
	N/A	N/A	N/A	N/A	N/A

Jacket/ Chemise

Type of jacket/ Genre de chemise	Jacket closure Fermeture de chemise	Proof Test Pression d'épreuve	Heating Surface Surface de chauffe	Sketch/ Schéma
N/A	N/A	N/A	N/A	N/A

Safety Valve Outlets/ Soupapes de sûreté

Number/ Nombre	Dimension	Location/ Endroit
1	1"	C2-SHELL

Nozzles and Openings/ Tubulures et ouvertures

Purpose/ But	Number Nombre	Dimension	Type	Material Matériau	Nominal Thickness Épaisseur nominale	Reinforcement material Matériau de renfort	How attached Genre d'attaches	Location/ Endroit
Inlet	1	1"	TOL	SA-105-N	CL3000	N/A	UW16.1(a)	Shell
Inlet	1	1"	TOL	SA-105-N	CL3000	N/A	UW16.1(a)	Shell
Outlet	1	2"	Coupling	SA-105-N	CL3000	N/A	UW16.1(c)	Head
Drain	1	0.75"	TOL	SA-105-N	CL6000	N/A	UW16.1(a)	Shell

Supports/ Supports

Skirt/ Jupe Yes/ Oui No/ Non	Lugs/ Oreilles No./ Nbre	Legs/ Pieds No./ Nbre	Other/ Autres (Description)	Attached/ Attaches (Where and How/ Méthode et endroit)
☐ ☒	No	No	N/A	N/A

Remarks/ Observations (Cubical capacity/ Volume)

Impact test exempt per UG-20(f) 1 - 5 and UCS-66C, UCS-66 Note C
Volume: 0.58 cu. ft.
Construction Drawing#E-381-A-1 Rev 3, PSV Installed by others as per UG-125(G),
Radiography None per UW-11(c),PWHT Exempt per UCS-56

Certificate of Compliance/ Certificat de conformité

We certify that the statements made in this data report are correct and that the said vessel has been constructed in accordance with the Provincial Registered design below and the requirements of standard CSA B51.

Nous certifions que les données de la déclaration de conformité sont correctes et que l'appareil a été construit en accord avec l'enregistrement provincial ci-dessous et les exigences de la norme ACNOR B51.

Provincial Registered Design
Enregistrement provincial W3746.213

Manufacturer
Constructeur Enlyn Corp.

Signature _____ Date FEB 05 / 2015

Certificate of Shop Inspection/ Certificat d'inspecton en usine

I, the undersigned, a duly authorized boiler and pressure vessel inspector
Je, soussigné, inspecteur autorisé de chaudières et appareil sous pression
employed by (employé par) ABSA
of (de) Alberta
have inspected the above vessel and state that to the best of my knowledge and belief the manufacturer has constructed the vessel in accordance with Canadian Registration No. W3746.213 and the requirements of CSA Standard B51. By signing this certificate, neither the inspector nor his or her employer makes any warranty, expressed or implied, concerning the vessel described in this manufacturer's data report. Furthermore, neither the inspector nor his or her employer shall be liable in any manner for any personal injury or property damage or a loss of any kind arising from or connected with this inspection.
ai inspecté l'appareil précité et, autant que je sache, le constructeur a construit l'appareil en accord avec le numéro d'enregistrement canadien _____ et les exigences de la norme CSA B51. En signant ce certificate, ni l'inspecteur ni son employeur ne donnent de garantie explicite ou implicite relativement à l'appareil décrit dans la présente déclaration. De plus, ni l'inspecteur ni son employeur ne doivent être tenus responsables de quelque manière que ce soit des dommages, matériels ou corporels, ou des pertes de quelque nature que ce soit pouvant résulter de cette inspection.

Inspector's Name
Nom de l'inspecteur Joe Tworek NB 12995 AB AB261

Signature J. Tworek Date 03 MAR 2015

Certificate of Compliance - Field Work/ Certificat de conformité - Installation au chantier

We certify that the field installation of all parts of the vessel conforms with the requirements of the Provincial Regulations.

Nous certifions que l'installation au chantier de toutes les composantes de l'appareil est conforme aux règlements provinciaux.

Installer's Name
Nom de l'installateur _____

Signature _____

Date _____

Certificate of Field Inspection/ Certificat d'inspection - Installation au chantier

I, the undersigned, a duly authorized boiler and pressure vessel inspector
Je, soussigné, inspecteur autorisé de chaudières et appareil sous pression
employed by
employé par _____
of (de) _____
have inspected the items not covered by the Certificate of Shop Inspection and the installation of the items and state that to the best of my knowledge and belief the construction and assembly of the items are in accordance with the applicable rules. By signing this certificate, neither the inspector nor his or her employer makes any warranty, expressed or implied, concerning the vessel described in this manufacturer's data report. Furthermore, neither the inspector nor his or her employer shall be liable in any manner for any personal injury or property damage or a loss of any kind arising from or connected with this inspection.
ai inspecté les composantes non couvertes par le certificate d'inspection en usine et l'installation de l'appareil et, autant que je sache, la construction et l'assemblage de l'appareil sont en accord avec les réglements provinciaux. En signant ce certificate, ni l'inspecteur ni son employeur ne donnent de garantie explicite ou implicite relativement à l'appareil décrit dans la présente déclaraton. De plus, ni l'inspecteur ni son employeur ne doivent être tenus responsables de quelque manière que ce soit des dommages, matériels ou corporels, ou des pertes de quelque nature que ce soit pouvant résulter de cette inspection.

Inspector's Name
Nom de l'inspecteur _____
Signature Date

ENILYN

enilyn.com

Fuel Gas Scrubber Index

4. Name Plate

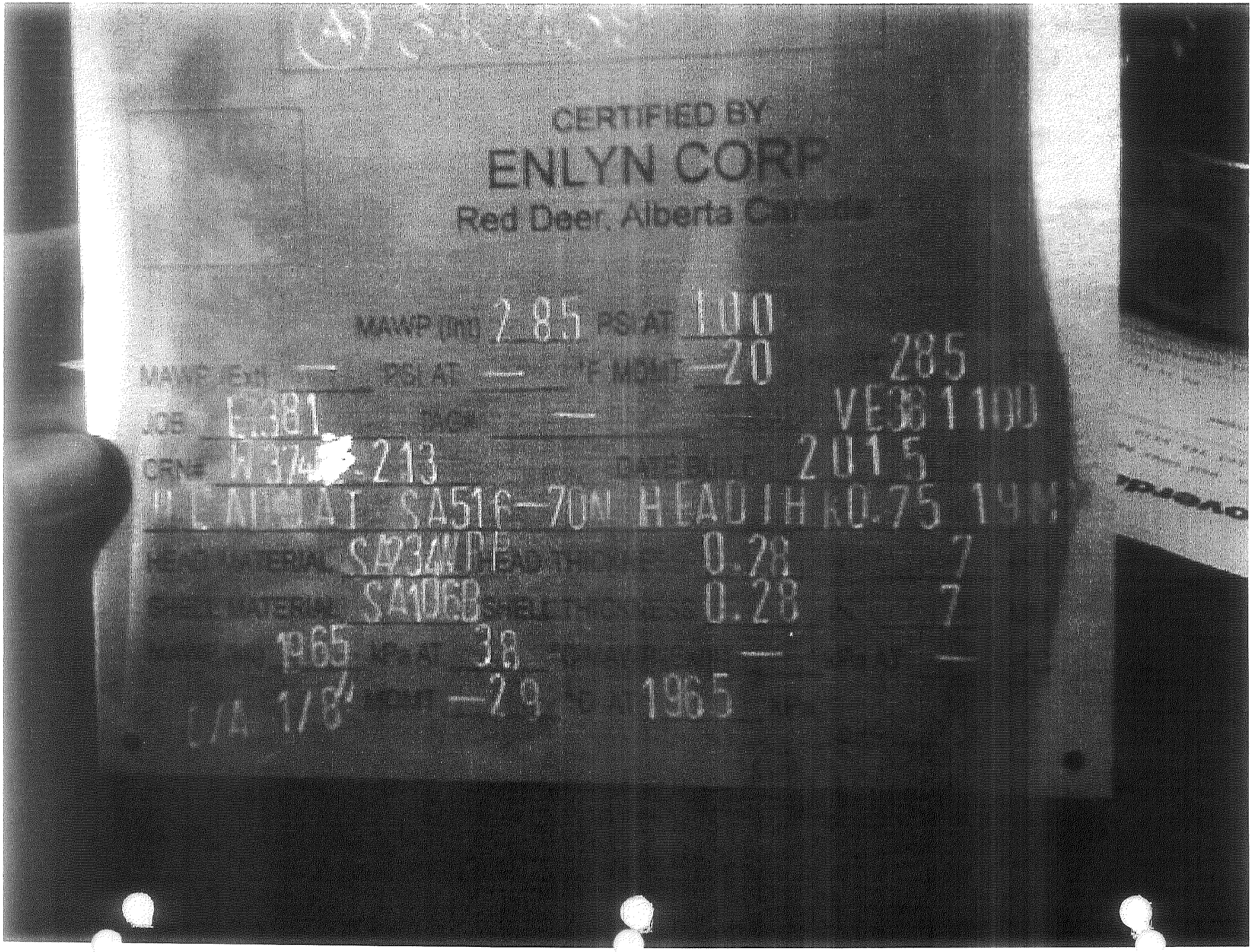
CERTIFIED BY
ENLYN CORP
Red Deer, Alberta
MAWP (DIV) 285 PSI AT 100
MAWP (Ext) — PSI AT — °F MDMT -20
285
JOB E.381
VE381100
CRN# H374-213
2015
SA516-70N HEAD TH 0.75
SA1068
0.28
7
1965
38
1/8"
-29
1965



Fuel Gas Scrubber Index

5. CRN

the pressure equipment safety authority

9410 - 20 Ave N.W.
Edmonton, Alberta, Canada T6N 0A4
Tel: (780) 437-9100 / Fax: (780) 437-7787

December 24, 2013

Attention: Mark Rajher
ENLYN CORP
6511 67 STREET
RED DEER, AB

The design submission, tracking number 2013-08642, originally received on November 19, 2013 was surveyed and accepted for registration as follows:

CRN : W3746.2 **Accepted on:** December 24, 2013

Reg Type: New Design

Drawing No. : 4245 SHT. 1 & 2 Rev 1

Design registered in the name of : ENLYN CORP

Description	MAWP	Design Temperature	MDMT
Internal Pressure	1965kPa	38 °C	-29 °C

An invoice covering survey and registration fees will be forwarded from our Revenue Accounts.

Enclosed are stamped prints for your reference.

Sincerely,

Zana Radisavljevic

RADISAVLJEVIC, ZANA, R.E.T.

Safety Authority

[illegible]
[illegible] Westminster, BC V3L 0E1

Toll Free: 1-866-566 SAFE
Fax: (778) 396 2064
www.safetyauthority.ca

ENLYN CORP.
6511 67 STREET
RED DEER AB T4P 1A3
CANADA

Date: February 20, 2014
Account #: 58817
Journal #: 59034
Our File #: 5486358

Attn: MARK RAJHER

Re: Application for Design Registration

The design, as detailed in your, Dwg: 4245 , for a Pressure Vessel is accepted for registration as follows:

Registered To: ENLYN CORP. **CRN:** W3746.21

MDMT: -20 deg F **MAWT:** 100 deg F **MAWP:** 285 psig

Drawing #: 4245 shts 1, 2 **Drawing Revision:** 1

Conditions Of Registration:

Registration of a 6 5/8" Generic Vessel.

This design was registered based on a technical review performed by the province of initial registration in accordance with the Association of Chief Inspectors policy on reciprocal recognition of design review.

Contact me if you have any questions. The invoice for registration will be forwarded under separate cover.

SHARON PETERS
(778) 396-2027
Sharon.Peters@safetyauthority.ca
Design Administration

cc:

Technical Safety Authority of Saskatchewan

2202 2nd Avenue
Regina, SK S4R 1K3
Canada

306-787-1443
info@tsask.ca
www.tsask.ca

REGISTRATION APPROVAL

26-Feb-14

Enlyn Corp.
6511 67th Street
Red Deer, AB
T4P 1A3

Our File **48206 [0V]**

ATTENTION : Mark Rajher

With reference to your submission respecting the registration of the item below, for legal use in the province, please note we have surveyed, approved and registered this design as noted.

MANUFACTURER :	**Enlyn Corp.**	
ITEM :	DRAWING NUMBER :	CRN :
Generic Vessel	4245 Sheets 1 & 2 Rev. 1	W3746.23

We wish to point out that every vessel must be constructed strictly in accordance with the registered design.

In addition to stamping every vessel with the registration number given above and as required in CSA Code B51, a Manufacturer's Data Report must be forwarded to this office immediately at the time a vessel is shipped. Such forms may be obtained upon request.

Sincerely,

Athan Syrgiannis, Engineer-in-Training
Codes and Standards Compliance

REMARKS: **CRN registered under reciprocal agreement.**

Enlyn Corp.
6511 - 67 Street
Red Deer, AB T4P 1A3

14-03-11

ATTN: Mark Rajher

RE: ASME Code Calculations – 2013 Edition.

Pressure vessel thickness calculations are done in accordance with Paragraph UG-27 of ASME Section VIII, Division 1, **2013 Edition.**
Reinforcement calculations are done in accordance with Paragraph UG-37.
Other paragraphs of the Code are also used, as required.

Our calculations are performed using the Microsoft Office spreadsheet software Excel.
In-house, the Excel Workbook is called Blue Diamond's 'Pressure Vessel Design Calculations'.
Design formulas have been input in accordance with the latest edition of the Code.
The master document is protected by a password to only allow access by the designer.
The program is then used by inputting the specific design criteria required for each job and then printing the output for the Alberta Boilers Safety Association and for your Quality Control files. We also keep a copy of the calculations for our files.

As each Code is issued, we review the master document to ensure compliance with any changes to the Code. We then run the program using standard test data from ASME Section VIII - Division 1 Example Problem Manual PTB-4 2013 and visually compare the results in our formulas to the numbers in the Code example to verify the program is operating correctly. At this point we protect the document again with a password.

These design drawings and calculations have been reviewed and are in accordance with ASME Section VIII, Division 1, **2013 Edition.**
If there are design changes to any drawing, between issuance of Code Editions, a revised copy will be sent immediately.

4245 Sht 1, 2	R1	W3746.2
4246 Sht 1, 2	R1	W3750.2
4247 Sht 1, 2	R1	W3748.2
4248 Sht 1, 2	R1	W3749.2

We appreciate the opportunity to be of service to you and if any additional information is required please call Phil Dade at (250) 391-4612.

Sincerely,
Blue Diamond Design Ltd.

per Phil Dade - President

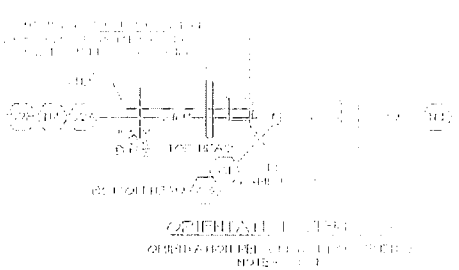

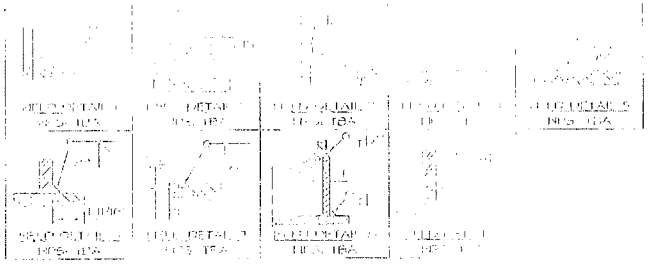

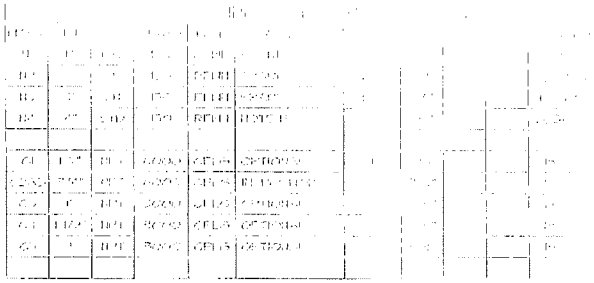

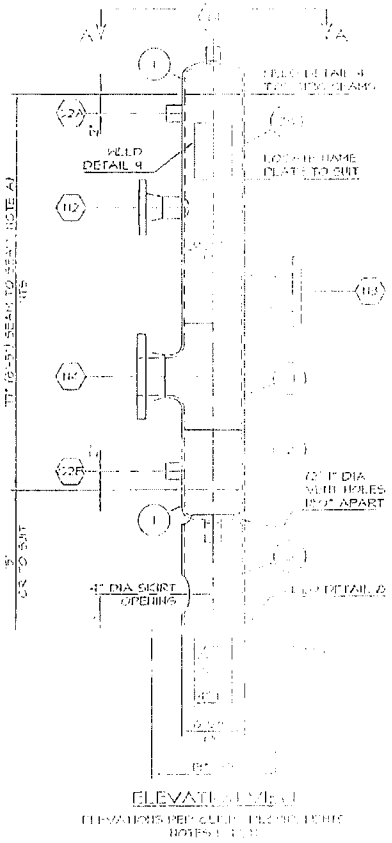

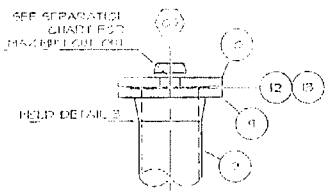

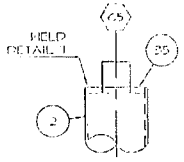



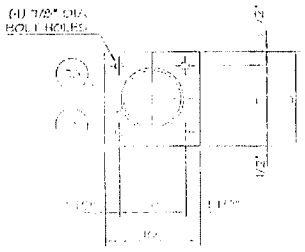

DESIGN NOTES

1. DESIGN TO FABRICATE TO: ASME SECTION VIII, DIVISION 1, 2010 EDITION, 2011 ADDENDA
2. DESIGN: ELOADABLE HORIZONTAL PRESCRIPE (MAWP): 150 PSIG
3. DESIGN TEMPERATURE: 100° F
4. MINIMUM DESIGN METAL TEMPERATURE (MDMT): -20° F AT 265 PSIG
5. MATERIALS: EXEMPT PER UG-20(F)1-5, FLANGES PER UG-44(a), STUDS PER FIG UCS-66, NOTE G
6. JOINTS: CAT. NONE PER UW-11a (NOTE B)
7. PLATE PER UCS-56, NOT REQUIRED (NOTE F)
8. HYDROSTATIC TEST PRESSURE: 375 PSIG
9. CORROSION ALLOWANCE: 1/8"
10. DESIGN DELTA: 300 LBS (MAXIMUM)
11. WEIGHT OF WATER: 400 LBS (MAXIMUM)

SCALE: ½" = 1" NOTES

1. [illegible] PROCEDURE REGISTRATION NUMBER: [illegible]
2. [illegible] 15 PSI (MAXIMUM)
3. [illegible] INSIDE OR OUTSIDE EDGES OF NOZZLES
4. [illegible] SHALL BE ROUNDED PER UG-76
5. [illegible] OF PREPARATION: HAND TOOL CLEAN (HT)
6. [illegible] AND PAINT: AS PER CLIENT SPECIFICATION
7. [illegible] ALL HOLES TO STRADDLE CENTERLINES.
8. [illegible] AND COVER ALL OPENINGS FOR SHIPMENT.
9. [illegible] WELDING PROCEDURE (TIG) FOR ALL TAGE WELDS
10. [illegible] OPENINGS [illegible]
11. [illegible] CLARIFICATIONS [illegible]

THIS DRAWING IS THE PROPERTY OF [illegible] AND IS NOT TO BE REPRODUCED WITHOUT THE PERMISSION OF [illegible]

[illegible] 3 HARTRAM ROAD, VICTORIA, BC V9C 1A1 TELEPHONE: (250) 391-6443 [illegible]

CRN: PENDING

REV	DATE	DESCRIPTION	DRN	CHK
1	15-11-13	ISSUED FOR REGISTRATION	[illegible]	[illegible]
0	15-11-12	[illegible]	[illegible]	[illegible]

CANADIAN DESIGNATION NUMBER

CALVERT PUMP

[illegible] SPEED AIR TYPE [illegible]

[illegible] PHONE: [illegible] FAX: [illegible]

REF DWG	[illegible]
DATE	[illegible]
ISSUED BY	[illegible]
ISSUED TO	[illegible]
SCALE	[illegible]
DRAWN BY	[illegible]
CHECKED BY	[illegible]
APPROVED	[illegible]

GENERAL ARRANGEMENT

[illegible] SHEET [illegible]

FABRICATION NOTES

A. THE SHELL LENGTH MAY BE LESS THAN [illegible] TO SUIT THE SEPARATION CHART DISTANCE.

B. FLANGES MAY BE INCREASED TO A HIGHER CLASS.

C. COUPLING / THREDOLET RATINGS MAY BE INCREASED TO CLASS 6000.

D. MATERIAL SPECIFICATIONS MAY BE INTERCHANGED AS FOLLOWS:
PLATE: SA-36 TO SA-516-70 TO SA-537 CL1
WELD FITTING (B16.9, B16.28): SA-234-WPB TO SA-234-WPC
PIPE (B36.10): SA-53-B, ERW TO SA-106-B SMLS
FORGING (B16.5, B16.9): SA-105 TO SA-350-LF2 TO SA-182-F304 (SMLS)

E. RADIOGRAPHY ON THE CIRCUMFERENTIAL WELDS OF THE SHELL IS INCREASED TO SPOT PER UW-11(a)5 OR FULL PER UW-11.

F. POST WELD HEAT TREATMENT MAY BE ADDED IF REQUIRED. A PWHT WELDING PROCEDURE IS USED (TDA). TEMPERATURE AND TIME: 1125° F ±25° F FOR 60 MINUTES MINIMUM.

G. NOZZLES N1 TO N4 MAY USE SAME SCHEDULE WELD ELBOWS OR TEES, ITEM 25 TO ITEM 32 (SEE DETAIL 5) AND MAY BE USED AS PART OF THE OVERALL LENGTH.

H. THE EDGE OF CUT-OUTS IN SOLID PLATE SHALL NOT BE PLACED CLOSER THAN 1/2" FROM THE EDGE OF ANY WELD PER UW-14(a).

I. INTERNALS MAY BE ADDED PROVIDED THEY ARE OF WELDABLE QUALITY TO SECTION IX AND USE WELDING PROCEDURE (TDA).

J. ANY CONNECTION MAY BE DELETED EXCEPT A DRAIN (1/2" NPT MIN), LOCATED AT THE LOWEST POINT PRACTICABLE IN THE VESSEL PER UG-25(f) AND THE INSPECTION (3/4" NPT MINIMUM).

K. COUPLINGS C1 TO C5 MAY BE INTERCHANGED WITH A SAME RATING THREDOLET OR ELBOWLET CONNECTION (WELD DETAIL 2).

L. THREDOLET / ELBOWLET CONNECTIONS MAY BE LOCATED ANYWHERE ON THE SHELL OR HEAD STYLE #1, PROVIDED THE CUT-OUT IS RADIAL (SEE DETAIL A). ANY THREDOLET CONNECTION MAY BE LOCATED AT THE CENTER OF HEAD STYLE #1 OR #3. THE MAXIMUM CIRCULAR CUT-OUT DIAMETER AND MINIMUM DISTANCE APART IS LISTED IN THE SEPARATION CHART.

M. ALL COUPLING AND PIPE CONNECTIONS MAY BE LOCATED RADIALLY ON THE SHELL OR AT THE CENTER OF THE HEAD STYLE #1. ANY COUPLING CONNECTION MAY BE LOCATED AT THE CENTER OF HEAD STYLE #3. THE MINIMUM DISTANCE TO ANY OTHER CONNECTION IS LISTED IN THE SEPARATION CHART.

N. THE 2" COUPLING AND PIPE CONNECTIONS LISTED IN THE OFFSET CHART, MAY BE OFFSET ON THE SHELL OR HEAD STYLE #1 AT THE MAXIMUM DISTANCE SPECIFIED.

O. THE SEPARATION CHART DISTANCES ARE BASED ON THE MAXIMUM ELLIPTICAL OPENING SIZE WHEN THE 2" COUPLING OR PIPE CONNECTIONS ARE OFFSET ON THE SHELL OR HEAD STYLE #1.

P. THE 4" NOZZLE (N-4) IS A REDUCING TEE TYPE CONNECTION AND SHALL BE LOCATED ONLY IN THE SHELL.

SEPARATION CHART (CENTER TO CENTER DIMENSIONS IN O.A.)

SIZE	1/2" NPT	3/4" NPT	1" PIPE	1" NPT	1 1/2" NPT	2" TOL	2" PIPE	2" CPLG	3" PIPE
MAX. ELLIPTICAL CUT-OUT	0.840" CUT-OUT	1.050" CUT-OUT		1.315" CUT-OUT	1.900" CUT-OUT	2.375" CUT-OUT			
1/2" NPT	5 1/2"								
3/4" NPT	6"	6 1/2"							
1" PIPE	6 1/2"	6"	6 5/8"						
1" NPT	6 3/4"	7 1/4"	6 5/8"	7 7/8"					
1 1/2" NPT	8 1/8"	8 5/8"	8 1/8"	9 3/8"	10 3/4"				
2" TOL	8 3/4"	9 1/4"	8 5/8"	9 7/8"	11 3/8"	11 7/8"			
2" PIPE	8 1/2"	8 5/8"	8 3/8"	8 1/8"	9 1/2"	9 3/4"	9 5/8"		
2" CPLG	9 7/8"	10"	9 3/4"	9 1/4"	9 1/8"	9 1/8"	9"	9 3/8"	
3" PIPE	9 1/4"	9 1/2"	9 1/4"	9 3/4"	9 3/8"	9 5/8"	9 1/2"	9 7/8"	9 3/8"

SHELL OR HEAD OFFSET CHART (NOTE N)

MARK	SIZE	DIMENSION "D"
N1	1"	1 7/8"
N2	2"	7/8"
C5 CPLG	2"	1/2"

STANDARD TOLERANCES

BASE CALCULATION:
GENERAL DEVIATION: ± 1/8"
OVERALL LENGTH: ± 1/4"
ANGULAR: ± 1°

WELD PREPARATION:
LAND: 1/16" ± 1/32"
ROOT GAP: 1/8" ± 1/16"
ANGULAR: 37½°

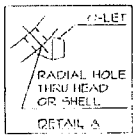

BILL OF MATERIAL

ITEM	QTY	DESCRIPTION	REMARKS	SPEC.
1	1	HEAD - 24" O.D. SPHERICAL CROWN x 240 RAD. KNUCKLE x 7/16" MIN. THK.	STYLE #1	SA-516-70
2	1	SHELL PIPE - 6" SCH. STD (.280") x 30" LG.	NOTE A	SA-106-B SMLS
3	1	SKIRT PIPE - 6" SCH. STD (.28 0") x 12" LG.	CUT TO SUIT	SA-53-B, ERW
4				
5	1	FLANGE - 1" CLASS 150 RFWN (A) SCH 160 BORE	N1, NOTE D	SA-105
6	1	FLANGE - 2" CLASS 150 RFWN (A) SCH 80 BORE	N2, NOTE E	SA-105
7	1	FLANGE - 3" CLASS 150 RFWN (A) SCH STD BORE	N3, NOTE F	SA-105
8	1	FLANGE - 4" CLASS 150 RFWN (A) SCH STD BORE	N4, NOTE F	SA-105
9	1	FLANGE - 6" CLASS 150 RFWN (A) SCH STD BORE	NOTE F	SA-105
10	1	FLANGE - 6" CLASS 150 RF BLIND	HEAD STYLE #2, NOTE B	SA-105
11				
12	1	GASKET - 6" CLASS 150 SPIRAL WOUND x 1/8" THK.	NOTE B	304 SS
13	8	STUDS - 3/4" DIA x 4" LG (4) x 2 NUTS EACH (SA-194-2H)	NOTE B	SA-193-B7
14				
15	1	COUPLING - 1/2" NPT CLASS 6000 FULL	C1, NOTE K	SA-105
16	2	COUPLING - 3/4" NPT CLASS 6000 FULL	C2A, C2B, NOTE K	SA-105
17	1	COUPLING - 1" NPT CLASS 3000 FULL	C3, NOTES G, K	SA-105
18	1	COUPLING - 1 1/2" NPT CLASS 3000 FULL	C4, NOTES G, K	SA-105
19	1	COUPLING - 2" NPT CLASS 3000 FULL	C5, NOTES G, K	SA-105
20				
21	1	PIPE - 1" SCH 160 (.250") x CUT TO SUIT	N1	SA-106-B
22	1	PIPE - 2" SCH XH (.218") x CUT TO SUIT	N2	SA-106-B
23	1	PIPE - 3" SCH XH (.300") x CUT TO SUIT	N3	SA-106-B
24				
25	1	ELBOW - 1" SCH 160 (.250") LR 90° WELD	N1, NOTE G	SA-234-WPB
26	1	ELBOW - 2" SCH XH (.218") LR 90° WELD	N2, NOTE G	SA-234-WPB
27	1	ELBOW - 3" SCH XH (.300") LR 90° WELD	N3, NOTE G	SA-234-WPB
28	1	ELBOW - 4" SCH STD (.237") LR 90° WELD	N4, NOTE G	SA-234-WPB
29	1	RED TEE - 6" SCH STD x 2" SCH XH (.218") WELD	N2, NOTE G	SA-234-WPB
30	1	RED TEE - 6" SCH STD x 3" SCH XH (.300") WELD	N3, NOTE G	SA-234-WPB
31	1	RED TEE - 6" SCH STD x 4" SCH STD (.237") WELD	N4, NOTE G	SA-234-WPB
32	1	EQUAL TEE - 6" SCH STD (.280") WELD	NOTE G	SA-234-WPB
33				
34	1	PLATE - 3/8" THK x 13" OD x 4" ID	BASE PLATE	SA-36
35	1	PLATE - 5/8" THK x 6" OD	HEAD STYLE #4	SA-516-70
36	1	PLATE - 5/8" THK x 10" x 10" LG	HEAD STYLE #4	SA-516-70
37				
38	1	STANDARD NAME PLATE AND BRACKET		SA-36/304 SS

NO.	DATE	REVISION	BY	CK
1	13-11-15	ISSUED FOR REGISTRATION	PJD	MR
0	13-11-12	ISSUED FOR APPROVAL	PJD	MR

ENLYN CORP.
#5N, 6 STREET
RED DEER, AB T4P 1A4
TELEPHONE: (403) 346-2255 FAX: (403) 346-2044

REF DWG:	N/A
DATE:	13-11-09
BDD NO.:	4245
JOB NO.:	
SCALE:	NTS
DRAWN BY:	PJD
CHECKED BY:	MR
APP BY:	PJD

GENERIC VESSEL
6 5/8" OD x 6'-5" S/S
NOTES, CHARTS AND BOM

DWG NO. 4245 | SHEET 2 OF 2 | REV 1

THIS DRAWING IS THE PROPERTY OF ENLYN CORP. IT MAY NOT BE REPRODUCED WITHOUT THE PERMISSION OF ENLYN CORP.

ENLYN

Fuel Gas Scrubber Index

6. Drawing



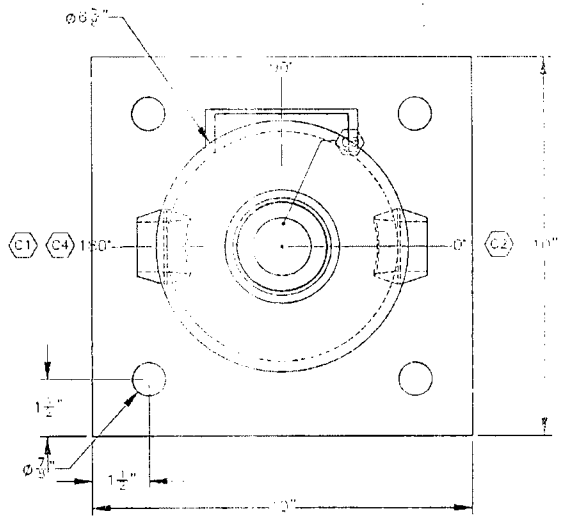

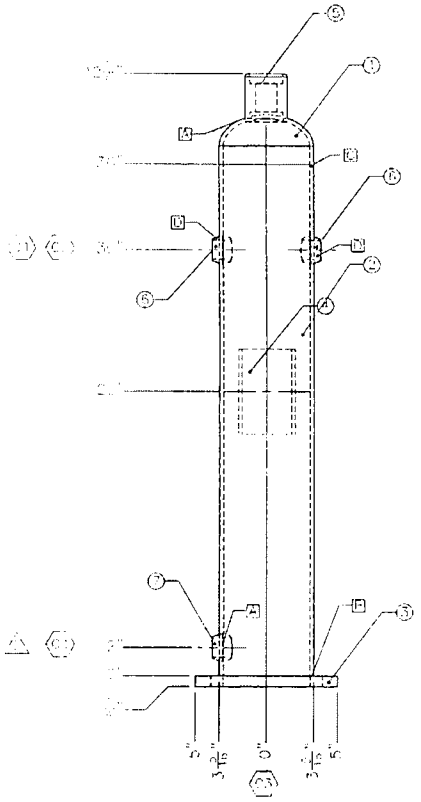

STANDARD TOLERANCES

FABRICATION
OUTSIDE DIMENSION +/- 1/8"
OUTSIDE PROJECTION +/- 1/4"
ANGULAR +/- 2°

WELD PREPARATION
LAND (ROOT FACE) 1/16" +/- 1/16"
JOINT GAP 1/4" +/- 1/16"
ANGULAR +/- 5°

GENERAL NOTES

DESIGN DATA			
CONSTRUCTION AS PER ASME SECTION VIII DIV. 1, 2013			
SERIAL NO:	VP361003	MAWP:	285 PSIG
CRN:	W0746.210	HYDROTEST:	373 PSIG
DESIGN TEMP:	100°F	C/A:	1/8"
MDMT:	-20°F @ 285 PSIG	YEAR BUILT:	2013
RADIOGRAPHY:	NONE PER UW-11(C)		
PREHEAT:	50°F		
PWHT PER UCS-56:	EXEMPT PER UCS-56		
IMPACT TEST:	EXEMPT PER UG-20(F) 1-5		
CAPACITY:	0.58 CU. FT.	WEIGHT (EMPTY):	
Q.C. PROGRAM:	ACP-12-45	WELD PROC. REG:	WP 522.2
INT. SANDBLAST:	N/A	INTERNAL PAINT:	N/A
EXT. SANDBLAST:	N/A	EXTERNAL PAINT:	N/A
PED'D CRT DWG NO:	468-12-2015-1	PED'D CRT NO:	0120-2015-CW-CE-1
A/I		MANUFACTURER:	ENLYN CORP.

NOZZLE SCHEDULE								
MK	QTY	SIZE	TYPE	FACE	SERVICE	P.L.	PROJECTION (IN)	PROJECTION (OUT)
N1	1	1"	3000#	RAISED	INLET			
N2	1	1"	3000#	RAISED	OUTLET			
N3	1	1"	3000#	RAISED	DRAIN			
N4	1	1"	3000#	RAISED	VENT			
N5	1	3"	150#	RAISED	MANWAY			

REVISIONS			
	DESCRIPTION	DRN BY	DATE
1	ADJUSTED WELD SPEC'S	EL	5/5/15
2	REVISED SIZE OF DRAIN LINE AND CUT-OUT	EL	5/13/15
3	ADDED "ALL BEVELS" ADDED SEE "L" LINES	EL	5/13/15
4	AS BUILT	EL	9/11/15

ENLYN

	BY	DATE
DWN	EL	11/3/15
CHK		
ENG APP		
QC APP		

36" OD x 42" SCFS REF
FLAT BOTTOM

ENLYN STOCK

DWG NO	REV	SHT	SIZE
E-381-A-1	4	1 OF 1	E

E-381

ENLYN
enlyn.com

Fuel Gas Scrubber Index

7. WPS and Welder Qualification

the pressure equipment safety authority

9410 - 20 Ave N.W.
Edmonton, Alberta, Canada T6N 0A4
Tel: (780) 437-9100 / Fax: (780) 437-7787

October 23, 2013

Attention: Mark Rajher
ENLYN CORP
6511 67 STREET
RED DEER, AB

The welding procedure, tracking number 2013-07603, originally received on October 11, 2013 was surveyed and accepted for registration as follows:

Reg. No. : WP-3221.2 **Accepted on:** October 21, 2013
Reg Type: Revision To accepted Design
Spec. No. : EC-1 REV 1

An invoice covering survey and registration fees will be forwarded from our Revenue Accounts.

Enclosed is a stamped welding procedure for your reference.

Please note the acceptance of this registration does not allow the use of this welding procedure in the construction, modification, on any boiler, pressure vessel, pressure piping system or fitting in Alberta unless the contractor/manufacturer has registered a Quality Control System for such work with ABSA.

Sincerely,

R. Roseberg

ROSEBERG, BOB, P. Eng.

Enlyn Corp.

Welding Procedure Specification

In accordance with

ASME Section VIII, Section IX, B31.1 and B31.3

Welding procedure Specification No.: EC-1-Rev 1

Supporting PQR No. (s): PQR- EC-1-rev 1

Qualified for

Process (es): SMAW/SMAW		Position(s): All/All
Filler Metal F-No.: F-3/F-4		A-No.: A-1/A-1
AWS Classification: E6010/E7018-1		Weld Type(s): Groove, Fillet, weld Buildup
Base metal: P-1		To: P-1
Typical Materials: This procedure is qualified for all P-1 materials as specified in table QW-422 of ASME Section IX for applications where proven notch toughness properties are not required.		
	Diameter Range: All diameters	Condition(s): As Welded
		Normal size
Thickness Range: ASME Section VIII		0.188" to 1.500"
	ASME Section IX	0.188" to 1.500"
	ASME B31.1/B31.3	0.188" to 0.750"

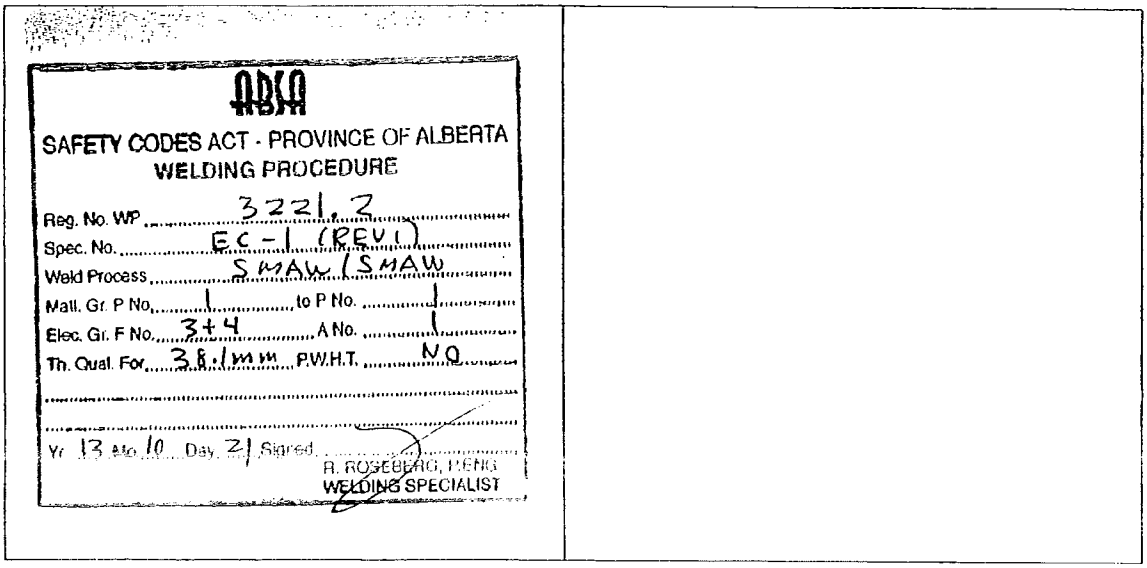

Welding Procedure Specification (WPS) QW-482

(Section IX, ASME Boiler and pressure vessel Code)

Company Name: Enlyn Corp. By: Mark Rajher

WPS No: EC-1-Rev1 Date: September 9, 2011

Revision No.: Rev1 Revision Date: Sept 17, 2013

Supporting PQR's: PQR-EC-1-Rev1

Welding Process (es): SMAW/SMAW Type(s): Manual/Manual

JOINTS QW-402	Joints Details
Joint Design: Butt, Tee, Lap, Corner, etc. Backing: F-3 filler metal with or without backing F-4 electrodes with backing only. Weld built up with or without fluid backing	All ASME joint designs. Reference construction Drawing for joint details. Where joint details are not specified, refer to typical joint detail sheet provided

Backing Material (Type): Similar base or weld metal or back welding as required. No Retainers.

BASE METALS QW-403

P-No.: P-1 Group No.: -------- to P-No.: P-1 Group No.: --------

OR

Spec. type & grade: Not Applicable to Spec. type & grade: Not Applicable

OR

Chem. Analysis & Mech. Prop: Not Applicable to Chem. Analysis & Mech. Prop: Not Applicable

Thickness Range

	Normal Size	
Base Metal: Groove: Section VIII	0.188" to 1.500"	Fillet: All
Section IX	0.188" to 1.500"	Fillet: All
B31.1/ B31.3	0.188" to 0.750"	Fillet: All
Pipe Dia Range: Groove: All		Fillet: All
Other: Maximum thickness of any weld layer shall not exceed 0.500"		

construction code is mandatory prior to production welding to determine any supplementary restrictions Reference to relevant

Filler Metals QW-404

Process:	SMAW	SMAW
Specification No. (SFA):	5.1	5.1
AWS Classification No.:	E6010	E7018-1
F-No:	F-3	F-4
A-No.:	A-1	A-1
Size of Filler Metal:	3/32",1/8",5/32"	3/32",1/8",5/32", 3/16",7/32", 1 /4"
Weld Metal Thickness- Groove	0.188"max	1.500" max
Fillet:	Unlimited	Unlimited
Weld Buildup:	Unlimited	Unlimited
Electrode –Flux (Class):	Not Applicable	Not Applicable
Flux Trade Name:	Not Applicable	Not Applicable
Alloy Flux:	Not Applicable	Not Applicable
Consumable Insert:	Not Applicable	Not Applicable
Supplement Filler Metals:	Not Applicable	Not Applicable
Product Form:	Covered Electrode	Covered electrode
Other:	Not Applicable	Not Applicable

Welding Procedure Specification (WPS) QW-482

(Section IX, ASME Boiler and pressure vessel Code)

WPS# EC-1-Rev1

POSITIONS QW-405	POST HEAT TRATMENT QW-407
Position(s) of Groove: All Weld Progression: F-3 SMAW Vertical Up or Down F-4 SMAW Vertical Up Position(s) of Fillet: ALL	Temp. Range: Not Applicable Time Range: Not Applicable Heating: Not Applicable Cooling: Not Applicable
PREHEAT QW-406	**GAS QW-408**
Temperature Min.: See Next Page Interpass Temp Max.: See Next Page Interpass Temp Min: See Next Page Preheat Maintenance: Monitor using tempilstiks, Pyrometer or other suitable methods	Shielding Gas(es): Not Applicable Composition: Flow Rate: Gas Backing: Backing Rate:

ELECTRIC CHARACTERISTICS QW-409

Current: F-3 SMAW: Direct-DC	F-4 SMAW: Direct-DC
Polarity:F-3 SMAW: Reverse EP	F-4 SMAW: Reverse EP
Amp(Range): F-3 SMAW: 50-180	F-4 SMAW: 50-360
Volts (Range): F-3 SMAW : 20-32	F-4 SMAW: 18-32
Travel Speed (Range)-Ipm: F-3 SMAW: 1-16	F-4 SMAW: 1-22
Tungsten electrode Type & Size: Not Applicable	
Mode of Metal Transfer for GMAW: Not Applicable	
Electrode Wire feed speed range: Not Applicable	
Others: Not Applicable	

TECHNIQUE QW-410

String or Weave Bead: String and weave. Weave size shall be controlled to prevent weld defects.
Orifice or Gas Cup Size: Not Applicable
Initial Cleaning: Base Material must be thoroughly cleaned of all foreign material(Scale, rust, oil, grease, paint, Tar, etc.) at least 1" back on each side of the joint prior to welding. All surfaces to be welded Shall be smooth, uniform and free from notches, slag, fins and burrs.
Interpass cleaning: Perform by wire brush, chipping hammer, power brushing grinding etc. after each weld layer
Method of back Gouging: Arc air, gouge, grind etc., If required. Grind to clean metal where thermal processes are used.
Contact tube to Work Distance: Not Applicable
Multiple or Single Pass (per side): Single or multiple passes per side.
Multiple or single Electrodes: Single electrodes only
Peening: Peening is not allowed.

TYPICAL WELDING PARAMETERS

	Filler Metal		Current			
Process	AWS Classification	Diameter (in)	Type & Polarity	Amp. Range	Voltage Range	Travel Speed (IPM)
SMAW	E6010	3/32	DC EP	50-100	20-32	1-12
SMAW	E6010	1/8	DC EP	50-150	20-32	2-14
SMAW	E6010	5/32	DC EP	70-180	22-32	4-16
SMAW	E7018-1	3/32	DC EP	50-110	18-24	1-12
SMAW	E7018-1	1/8	DC EP	70-160	19-26	1-16
SMAW	E7018-1	5/32	DC EP	110-220	20-28	1-18
SMAW	E7018-1	3/16	DC EP	160-320	20-30	2-20
SMAW	E7018-1	7/32	DC EP	240-340	20-32	3-22
SMAW	E7018-1	1/4	DC EP	275-360	20-32	4-22
Notes:	Number of weld layers and size of filler metal may vary with thickness of base material and position of weld 1/4" E7018-1 electrodes are limited to flat (1G) position only.					

Reference to relevant construction code is mandatory prior to production welding to determine any supplementary restrictions.

Welding Procedure specification (WPS) QW-482

(Section IX, ASME Boiler and Pressure Vessel Code)

WPS#EC-1 Rev. 1

PREHEAT AND INTERPASS TEMPERATURE MINIMUM AND MAXIMUM	
Section VIII:	50°F minimum for all P-1 materials except as listed below: 175°F if the joint thickness exceeds 1.000" and specificed carbon content exceeds 0.30% 200°F if the joint thickness is 1.250" to 1.500"
B31.1:	50°F minimum for all P-1 materials except as listed below:
B31.3:	50°F minimum for all P-1 materials except as listed below: 175°F if the specified minimum tensile strength of the base metal exceeds 71 ksi
Max. Interpass Temp: 650°F for normal service, 550°F when proven notch toughness is required	

Reference to relevant construction code is mandatory prior to production welding to determine any supplementary restrictions.

Typical Joint Details QW-482

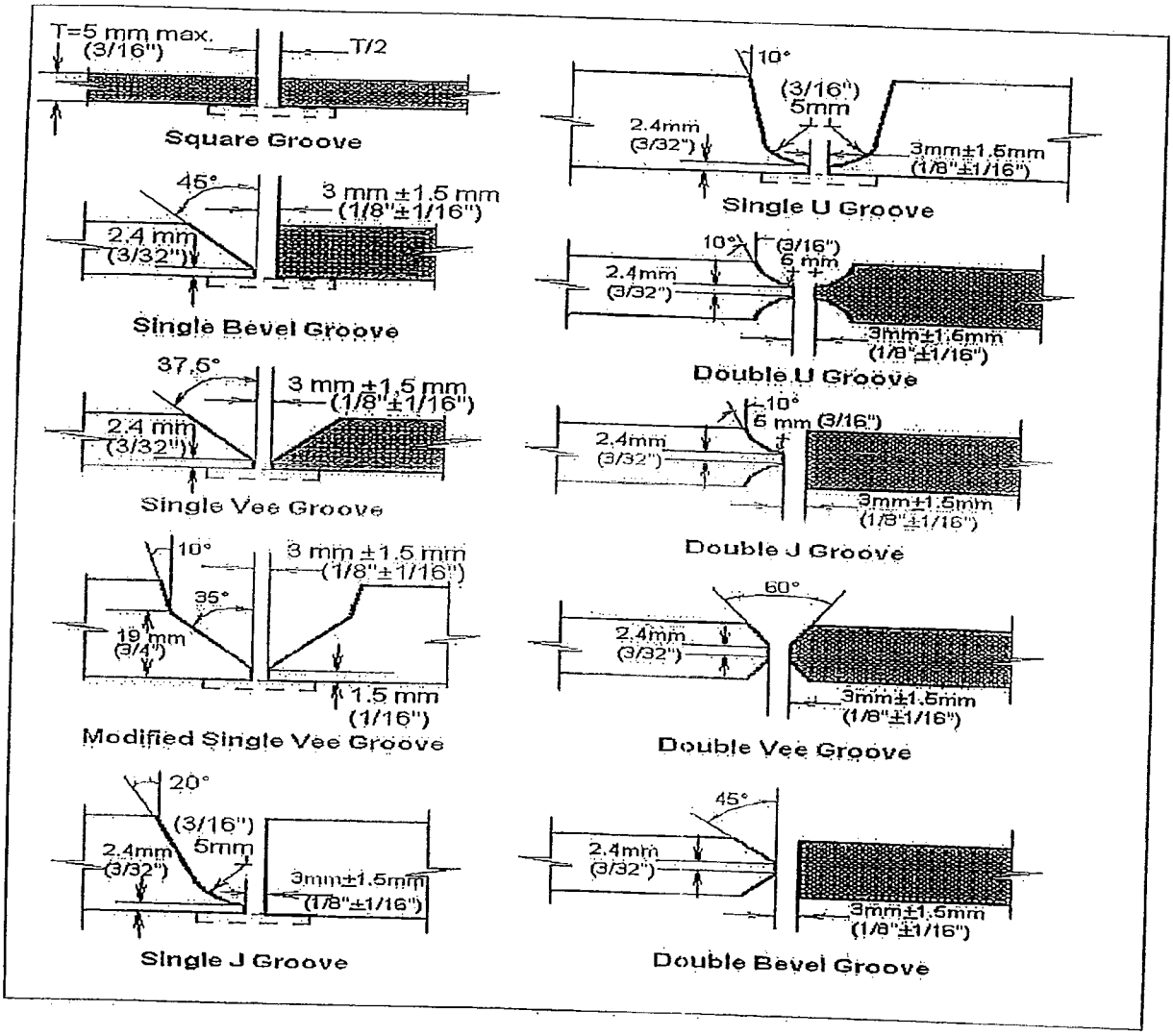

QW-483 PROCEDURE QUALIFICATION RECORD (PQR)

Enlyn Corp.

Procedure Qualification Record No.: EC-1 Rev1 Date: September 18, 2013

Welding Procedure Specification No.: EC-1-Rev1

Welding Process (es): SMAW Type(s): Manual

JOINTS (QW-402)

Type: Butt joint, single vee groove, see next page

Base Metals (QW-403)

Material Spec.: SA 516	Type or Grade: Gr. 70N
P-No: P1 to P-No. P1	Thickness: 38.1mm (1.50 in)
Diameter: N/A	Other: Plate product form

Filler Metals (QW-404)

Specification No. (SFA):	SFA5.1	SFA5.1
AWS No. (Class)	E6010	E7018-1
Filler Metal F-No.	F3	F4
Filler Metal A-No.	A1	A1
Size of Electrode:	See attached sketch	See attached sketch
Deposited Weld Metal Thickness:	2.39mm (0.094 in)	35.7mm (1.406 in.)

Position (QW-405)

Position of Groove: 1G

Weld Progression: N/A

PREHEAT (QW-406)

Preheat Temperature: 66°C (150°F) Interpass Temp (Max.): 315°C (600°F)

POST WELD HEAT TREATMENT (QW-407)

Temperature: None Time: N/A

Electrical Characteristics (QW-409)

Current: Direct	Polarity: Reverse, electrode positive
Amp: See Next Page	volts: See next page
Max heat Input: N/A	

TECHNIQUE (QW-410)

String or Weave: Root: String	Remainder: Weave	Travel speed: See next page
Multiple or Single pass per side: Multiple pass from groove side		
Multiple or Single Electrode: Single		

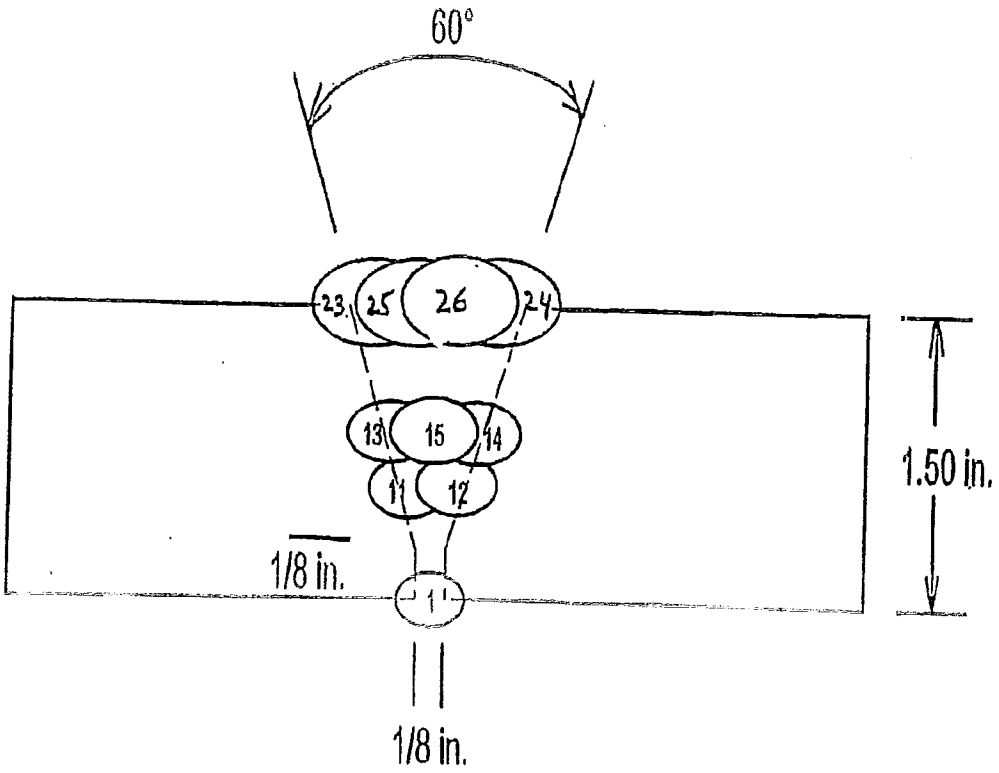

Pass	Process	Filler metal	Diameter Mm(in)	Current & Polarity	Amperage Range	Voltage Range	Travel Speed mm/min(i.p.m.)
1	SMAW	E6010	3.2(1/8)	DCRP	85-90	25-26	132/(5.2)
2	SMAW	E7018-1	3.2(1/8)	DCRP	125-135	21-23	125/(4.9)
3&4	SMAW	E7018-1	4.0(5/32)	DCRP	175-185	21-23	152-160/(6-6.3)
5-19	SMAW	E7018-1	5.0(3/16)	DCRP	240-250	22-24	153-218/(6-8.6)
20-26	SMAW	E7018-1	5.0(3/16)	DCRP	225-235	22-24	188-234/(7.4-9.2)

Enly Corp. recorded all process parameters during welding process.

Tensile Test (QW-150)

Specimen Number	Width mm(in.)	Thickness mm(in.)	Area Sq. mm (Sq. in.)	Ultimate Load N (lbs.)	Ultimate stress MPa (Psi)	Character & Fracture Location
T1	19.1	37.7	720	380 304	528	Partial cup& cone
	(0.752)	(1.48)	(1.12)	(85 500)	(76 600)	Parent metal
T2	19.0	37.7	716	379 179	529	Partial cup & cone
	(0.748)	(1.48)	(1.11)	(85 200)	(76 800)	Parent metal

GUIDED BEND TEST (QW-160)

Type & Figure No.	Result	Type & Figure No.	Result
Qw-462.2, TSB-S1	Pass	Qw-462.2, TSB-S3	Pass
Qw-462.2, TSB-S2	Pass	Qw-462.2, TSB-S4	Pass

OTHER TESTS

Vickers hardness see attached laboratory report# C13-1304.1

Welder Name: Kyle Crouch	Certificate File No. W17776
Test Conducted By: Mark S Rajher	
Laboratory Test No.: C13-1304.1	

We certify the statements in this record are correct and that the test welds were prepared, welded and tested in accordance with the requirements of Section IX of the ASME Code.

Manufacturer: Enlyn Corp.	
Date: 18 September 2013	Signed:

LABORATORY TEST REPORT

Customer:	Enlyte Corp. 6511 - 67 Street Red Deer, Alberta T4P 1A3	Laboratory Test No.:	CTS-1204-1
		Date:	October 4, 2013
Attention:	Waqar Ahmed		

WPS Number:	EC-1 Rev 1
Material:	SA 516 Gr. 70 (Heat No.: 314610 - 32985)
Thickness:	38.1 mm (1.50 in.)
Thermal Condition:	As welded

Governing Specification: ASME Section IX, 2010 edition and latest addenda

TENSILE TEST QW-150

MACHINE: Tinius Olsen Super L-400 S/N: 110585

SAMPLE NUMBER	T1 QW-462.1(a)		T2 QW-462.1(a)	
WIDTH mm (in)	19.1	(0.752)	19.0	(0.748)
THICKNESS mm (in)	37.7	(1.48)	37.7	(1.48)
AREA sq mm (sq in)	720	(1.12)	716	(1.11)
ULT LOAD kN (lbf)	380 304	(85,500)	379 179	(85,200)
UTS MPa (psi)	528	(76,600)	529	(76,800)
FRACTURE TYPE	Partial Cup & Cone		Partial Cup & Cone	
FRACTURE LOCATION	Parent Metal		Parent Metal	

Note: Imperial values calculated by direct conversion

GUIDED-BEND TEST QW-160

SAMPLE TYPE - QW-462.2	Side Bend	Side Bend	Side Bend	Side Bend
SAMPLE NUMBER(S)	S1	S2	S3	S4
RESULTS	Pass	Pass	Pass	Pass

Laboratory Test Conducted In Calgary By: Xin (Vincent) Su, T.T.

Laboratory Test Certified By: _____ [illegible] CWT

[illegible] A-B Accredited Certificate Number [illegible] Testing

This report is certified by the Company under its General Conditions for Inspection and Testing Services (copy available upon request). The issuance of this report (or certificate) does not relieve Buyer or seller from exercising all duties, rights and discharging all liabilities under the Contract of Sale. Liability to the Company in connection with this report (or certificate) is limited to the amount paid for the services. Any use which a third party makes of this report (or certificate), or any reliance on or decisions to be made based on it, are the responsibility of such third parties. The Company accepts no responsibility for damages, if any, suffered by any third party as a result of decisions made or actions based on this report (or certificate). This report (or certificate) is for the exclusive use of the Company's Client and may not be reproduced, circulated or quoted, in whole or in part, for any purpose without the prior written consent of the Company. Any unauthorized alteration, forgery or falsification of the content or appearance of this report (or certificate) is unlawful and offenders may be prosecuted to the fullest extent of the law. Unless otherwise agreed, samples will be retained for a period of 30 days from the date of this report (or certificate), after which time they will be disposed of without further notice to the Client. Test results relate only to the items tested. Results of tests on samples submitted by the Client may not be representative of the bulk supply unless sampling was performed by the Company. Samples submitted to the Company will be tested as received and will not be modified to represent the bulk supply unless specifically requested by the Client. Any special terms or conditions which are communicated to the Company in writing and accepted by the Company prior to the performance of the services will govern to the extent of any inconsistency with these terms and conditions. Except as specifically stated in this report (or certificate), the Company makes no warranties, express or implied, and specifically disclaims any warranties of merchantability or fitness for a particular purpose. Any claims against the Company must be made within 30 days from the date of this report (or certificate), failing which such claims will be deemed waived. Opinions and interpretations expressed herein may not be relied upon by any person other than the Client, and then only for the Client's internal purposes. Opinions and interpretations may include our unsolicited professional advice based upon our client's description of its interest in the services and are not binding upon us unless set forth in an amendment executed by both parties. Any opinions and interpretations will be based solely on the information provided to the Company and on the assumption that all relevant information has been provided by those persons from whom it was requested. Unless otherwise agreed in writing, the Company will not be responsible for any loss, damage or delay caused by circumstances beyond its control. The Company is not responsible for delays or damages caused by inaccurate information provided by the Client or other third parties. The Company shall not be liable for any loss, damage or delay caused by any failure or deficiency in the performance of its obligations hereunder if such failure or deficiency is due to any event beyond the reasonable control of the Company. The Company shall not be liable for any indirect or consequential damages. Opinions and interpretations may be based on inferences from visual examinations or spot checks. Sufficient testing and sampling should be undertaken to obtain a representative result. Any sample tested or described in this report (or certificate) was supplied by the Client or by a third party at the Client's direction. Results may not be applicable to samples not tested. The Company will perform services in accordance with the instructions of our Client, and/or our assessment of such results on the basis of any technical standards, trade customs or practices, or other circumstances which should in our professional opinion be taken into account.

LABORATORY TEST REPORT

CUSTOMER:	Enlyte Corp. 6511 - 67 Street Red Deer, Alberta T4P 1A3	Laboratory Test No.:	C13-1204.1
		Date:	September 30, 2013
Attention:	Waqar Ahmed		

WPS Number:	EC-1 Rev 1
Material:	SA 516 Gr. 70 (Heat No.: 314610 - 32985)
Thickness:	38.1 mm (1.50 in.)
Thermal Condition:	As welded

Governing Specification: ASTM E384-11^{e1}, ANSI/NACE MR0175/ISO 15156-2:2009(E).

HARDNESS TEST

Type of Test: Vickers 10 kg (HV10) Instrument: Mitutoyo AVK-C1

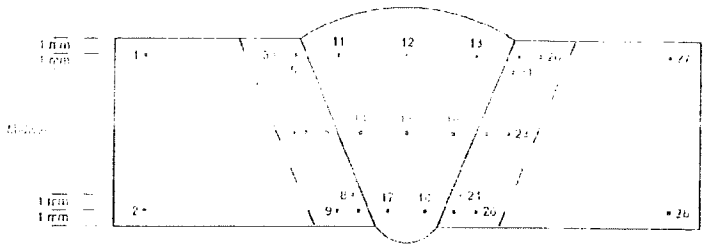

Parent Metal		HAZ		Weld Metal		HAZ		Parent Metal	
1	148	*3*	194	*11*	210	*19*	231	*27*	151
2	136	*4*	224	*12*	212	*20*	194	*28*	136
		5	236	*13*	212	*21*	234		
		6	181	*14*	190	*22*	179		
		7	194	*15*	175	*23*	171		
		8	183	*16*	179	*24*	188		
		9	183	*17*	172	*25*	188		
		10	184	*18*	189	*26*	186		

Laboratory Test Conducted In Calgary By: Xin (Vincent) Su, T.T.

Laboratory Test Certified By: _____ Dan Nguyen, C.E.T. I-A-B Accredited Certificate Number 12057-1 Testing

This report (or certificate) is issued by the Company under its General Conditions for Inspection and Testing Services (copy available upon request). This issuance of this report (or certificate) does not relieve the buyer or seller from any of their rights and obligations under the Contract of Sale. Signatories to this report are not bonded on the Company. The Company's liability and this report (or certificate) is limited to the terms and conditions of the said Contract of Sale. The Company accepts no responsibility for, nor does it exercise any control over, the use or misuse of any of its reports (or certificates) or of any of the information contained therein. Except by specific written agreement, samples submitted to the Company for inspection or testing will not be retained by the Company for more than 30 days. The interpretation of the information in this report (or certificate) is based upon the results of inspection or testing procedures carried out in accordance with the instructions of our Client, and/or our assessment of such results on the basis of any technical standards, trade custom or practice, or other circumstances which should in our professional opinion be taken into account.

A.O.Q.P. No. 7105 (c)

SGS LUDWIG

WELDER PERFORMANCE QUALIFICATION CARD

Name: Kyle Crouch ABSA File No.: W - 17776

This card is issued pursuant to the Alberta Safety Codes Act and the Pressure Welders Regulation. The performance qualification is in accordance with ASME Section IX of the ASME Code and is subject to the limitations on the reverse side.

November 18, 2013 — Signature of Welder or Machine Operator

Date of Test

Rob Cormier
Welding Examiner

Card No.: 12817

PERFORMANCE QUALIFICATION 12817

Process(es)	SMAW	SMAW	Materials (P.No)	P1
Filler Metal Group (F.No)	F3	F4	Min. Outside Diameter	1.0 in. O.D.
Max. Deposited Weld Metal	0.188 in.	0.248 in.	Position(s) Qualified	All
Backing	With or Without	With	Backing Gas	N/A
Progression	Uphill	Uphill		

November 18, 2015 — P.O. Expiry Date

Welding Examiner Signature

E-03441 — Examiner File No.

SGS LUDWIG

A.O.Q.P. No. 7106 (c)

WELDER PERFORMANCE QUALIFICATION CARD

Name: Kyle Crouch ABSA File No.: W - 17776

This card is issued pursuant to the Alberta Safety Codes Act and the Pressure Welders Regulation. The performance qualification is in accordance with ASME Section IX of the ASME Code and subject to the limitations on the reverse side.

November 18, 2013 .
Date of Test

Signature of Welder or Machine Operator

Rob Cormier
Welding Examiner

Card No.: 12819

PERFORMANCE QUALIFICATION 12819

Process(es)	SMAW	SMAW	Materials (P.No)	P1
Filler Metal Group (F.No)	F3	F4	Min. Outside Diameter	1.0 In. O.D.
Max. Deposited Weld Metal	0.250 In.	MAX	Position(s) Qualified	All
Backing	With or Without	With	Backing Gas	N/A
Progression	Downhill	Uphill		

November 18, 2015
P.Q. Expiry Date

Welding Examiner Signature

E-00441
Examiner File No.

SGS LUDWIG

WELDER PERFORMANCE QUALIFICATION TEST RECORD

Company	Enlyn Corp.	Contact	Tony Madsan
Welder's Name	Kyle Crouch	ABSA File No.	W-17776
WP Registration No.	3221.2	WPS No.	EC-2 (Rev. 1)
Welding Process(es)	SMAW	Type	Manual
Specification of Base Metal(s)	A 513 Gr. 1026	Thickness	15.9 mm (0.625 in.)

Welding Variables (QW-350)				Actual Values		Range Qualified
Backing				F3	None	With or without
				F4	With	With backing
Base metal P-No. 1 to P-No. 1				P1		P1
☐ Plate	☒ Pipe			2.50 in. O.D.		1.0 in. O.D. minimum
Filler metal or electrode specification(s)				SFA 5.1		WPS requirements
Filler metal or electrode classification(s)				E6010 / E7018-1		WPS requirements
Filler metal F-Number(s)				F3 / F4		F3 / F4
Deposit thickness for each process						
SMAW: F3	3 layers minimum	☐ Yes	☒ No	0.125 in.		0.250 in. maximum
SMAW: F4	3 layers minimum	☒ Yes	☐ No	0.500 in.		Max. to be welded
Position qualified				6G		All
Vertical progression				F3	Downhill	Downhill
				F4	Uphill	Uphill

RESULTS

Visual examination of completed weld (QW-302.4) Acceptable

Bend test ☒ QW-462.2; ☐ QW-462.3(a); ☐ QW-462.5(c); ☐ QW-462.5(d)

Side bend #S1	Pass	Side bend #S3	Pass
Side bend #S2	Pass	Side bend #S4	Pass

PASS

Alternative radiographic examination results (QW-191) N/A

We certify the statements in this record are correct and that the test welds were prepared, welded and tested in accordance with the requirements of Section IX of the ASME Boiler and Pressure Vessel Code.

ACCREDITED ORGANIZATION	SGS Ludwig Associates Ltd.	A.O.Q.P. Registration No.	7106 (C)
Test Conducted By	Rob Cormier, CSA W178.2 Level 1 Insp.	Date of Test	November 18, 2013
Certified By	Rob Cormier, C.E.T., I.W.T.	Welding Examiner File No	E00441
Test Certified for Enlyn Corp. by Representative			Josh Eddie

RECORD INFORMATION

SGS Ludwig Associates Ltd. testing facility	☐ Edmonton	☒ Calgary	☐ Field
Date test coupon is to be retained	December 18, 2013	Test Coupon I.D. No.	C2-60
Welder Performance Qualification Card No.	12819	Laboratory Test No.	CW13-896.1

WELDER PERFORMANCE QUALIFICATION TEST RECORD

Company	Enlyn Corp.	Contact	Tony Madsan
Welder's Name	Kyle Crouch	ABSA File No.	W-17776
WP Registration No.	3221.2	WPS No.	EC-2 (Rev. 1)
Welding Process(es)	SMAW	Type	Manual
Specification of Base Metal(s)	SA 106 Gr. B	Thickness	5.54 mm (0.218 in.)

Welding Variables (QW-350)			Actual Values	Range Qualified
Backing			F3 None	With or without
			F4 With	With backing
Base metal P-No. 1 to P-No. 1			P1	P1
☐ Plate	☒ Pipe		2.375 in. O.D.	1.0 in. O.D. minimum
Filler metal or electrode specification(s)			SFA 5.1	WPS requirements
Filler metal or electrode classification(s)			E6010 / E7018-1	WPS requirements
Filler metal F-Number(s)			F3 / F4	F3 / F4
Deposit thickness for each process				
SMAW: F3 3 layers minimum	☐ Yes	☒ No	0.094 in.	0.188 in. maximum
SMAW: F4 3 layers minimum	☐ Yes	☒ No	0.124 in.	0.248 in. maximum
Position qualified			6G	All
Vertical progression			Uphill	Uphill

RESULTS

Visual examination of completed weld (QW-302.4) Acceptable

Bend test ☐ QW-462.2; ☒ QW-462.3(a); ☐ QW-462.5(c); ☐ QW-462.5(d)

Transverse face bend #F1	Pass	Transverse root bend #R1	Pass
Transverse face bend #F2	Pass	Transverse root bend #R2	Pass

PASS

Alternative radiographic examination results (QW-191) N/A

We certify the statements in this record are correct and that the test welds were prepared, welded and tested in accordance with the requirements of Section IX of the ASME Boiler and Pressure Vessel Code.

ACCREDITED ORGANIZATION	SGS Ludwig Associates Ltd.	A.O.Q.P. Registration No.	7106 (C)
Test Conducted By	Rob Cormier, CSA W178.2 Level 1 Insp.	Date of Test	November 18, 2013
Certified By	Rob Cormier, C.E.T., I.W.T.	Welding Examiner File No.	E00441
Test Certified for Enlyn Corp. by Representative	Josh Eddie		

RECORD INFORMATION

SGS Ludwig Associates Ltd. testing facility	☐Edmonton	☒Calgary	☐Field
Date test coupon is to be retained	December 18, 2013	Test Coupon I.D. No.	C2-58
Welder Performance Qualification Card No.	12817	Laboratory Test No.	CW13-896.2

ENLYN
enlyn.com

Fuel Gas Scrubber Index

8. Pressure testing

ENLYN

Pressure Test Report

EXHIBIT 16.2

Job No: E-381 Serial Number: VE381100 A #:

Description: 6 5/8" OD X 36" Scrubber flat bottom

Drawing Number and Revision Level

DWG E-381-A-1 Rev3

Item(s) MAWP 285 PSIG [ ] 1.1x MAWP [x] 1.3x MAWP [ ] 1.5x MAWP

[X] Hydrostatic Test [ ] Pneumatic Test Test Medium: Water

Required Test Pressure: 373 PSIG MDMT: Minus 20F Required Duration: 15 Minutes

Actual Pressure: 373 PSIG Ambient Temp: 10°C Actual Duration: 15 min

Test Gauge ID	Gauge Range	Calibration Expiry Date
EP-10	0-600 PSI	10/30/2015
EP-25	0-600 PSI	02/14/2015
Chart Recorder ID	**Chart Recorder Range**	**Calibration Expiry Date**

Comments:

Enlyn Inspector		Date:	Jan 28/15
Owners Inspector		Date:	
Authorized Inspector		Date:	

Job#66910

277 Burnt Park Drive
Red Deer County, AB
T4S 2L4

Ph. 403-343-2822
Fax 403-347-1470
Email:info@kingsenergy.com
Web: www.kingsenergy.com

PRESSURE GAUGE VERIFICATION TEST CERTIFICATE

This gauge has been calibrated by adjusting the instrument or compiling a deviation chart so that its reading can be correlated to the actual value being measured We certify that the gauge identified below has been verified with precise test equipment and the variance has been recorded in the table below.

MODEL AND RANGE: 4" 1/2" NPT BM - WGI - 0-600 PSI

GAUGE No.: EP-10 Company: Enlyn Process Systems

Temperature at time of Calibration: 20C

INDICATED VALUE		DIGITAL READINGS		VARIANCE 1% Full Scale		
0	psi	0.0	psi	0	psi	0.00%
100	psi	99.7	psi	-0.3	psi	-0.05%
200	psi	199.6	psi	-0.4	psi	-0.07%
300	psi	300.6	psi	0.6	psi	0.10%
400	psi	401.8	psi	1.8	psi	0.30%
500	psi	501.5	psi	1.5	psi	0.25%
600	psi	601.4	psi	1.4	psi	0.23%

TECHNICIAN: Mike Samaroden DATE: 10/30/2014

The above instrument was compared to a King's Crystal 2KPSIXP2I digital gauge [illegible]

Chandler Deadweight model 5-145, serial # 12/95-18KMS #5 Deadweight tester traceable through Institute for National Measurement Standards (I.N.M.S) Canada.

Signature: [illegible]

Job#59717

277 Burnt Park Drive
Red Deer County, AB
T4S 2L4

Ph. 403-343-2822
Fax 403-347-1470
Email:info@kingsenergy.com
Web: www.kingsenergy.com

PRESSURE GAUGE VERIFICATION TEST CERTIFICATE

This gauge has been calibrated by adjusting the instrument or compiling a deviation chart so that its reading can be correlated to the actual value being measured We certify that the gauge identified below has been verified with precise test equipment and the variance has been recorded in the table below.

MODEL AND RANGE: 4" 1/2" NPT BM - WGI - 0-600

GAUGE No.: Ep-26 Company: Enlyn Process Systems

Temperature at time of Calibration: 20 C

INDICATED VALUE		DIGITAL READINGS		VARIANCE		
0	psi	0.0	psi	0	psi	0.00%
100	psi	105.3	psi	5.3	psi	0.88%
200	psi	205.3	psi	5.3	psi	0.88%
300	psi	304.9	psi	4.9	psi	0.82%
400	psi	402.1	psi	2.1	psi	0.35%
500	psi	501.1	psi	1.1	psi	0.18%
600	psi	600.0	psi	0	psi	0.00%

TECHNICIAN: Leonard O'Keefe DATE: 2/14/2014

The above instrument was compared to a King's Crystal "KPSIXP2" digital gauge [illegible]

Chandler Deadweight model 5-145, serial # 12/95-18KMS #5 Deadweight tester [illegible] through Institute for National Measurement Standards (I.N.M.S) Canada.

Signature: _____

ENLYN
enlyn.com

Fuel Gas Scrubber Index

9. MTRS

[illegible]

[illegible] VALIN
[illegible] CO.,LTD

MILL TEST REPORT

(ACCORDING [illegible])

Add: 10 Dalixincun, Hengsh[illegible] [illegible] R.Cama [illegible]
Tel and Fax: +86 734 [illegible]
E-mail: [illegible]@hysteclub[illegible]

[illegible]	[illegible]	CERTIFICATE NO	[illegible]		
[illegible]	[illegible]	P.O. NO.	PO 3364224-OR-2100-A [illegible]	[illegible] 4FAUD5-00286	DATE [illegible] PAGE [illegible]
[illegible]	[illegible] CARBON STEEL PIPE FOR OIL AND GAS USE		DELIVERY CONDITION		
[illegible]	SEE SPECIFICATION NOTE		HEAT TREATMENT		
[illegible]	[illegible] X42		DIMENSIONS	[illegible]	
[illegible] BUNDLE	12	TOTAL PIECES: 108	TOTAL LENGTH	2161.42 ft	[illegible]

[illegible]	[illegible]	HEAT No.	BUNDLES	PIECES	LENGTH ft	WEIGHT mm WT	TENSILE TEST ASTM A370 SAMPLE TYPE/ORIENTATION/SIZE(mm)/GAUGE LENGTH [illegible]						
							TS(psi)	YS(psi)	R0.5	El(%)	[illegible]	YS/TS	[illegible]
[illegible]	[illegible]	322475	4	36	720.47	6.20[illegible]	82795	62930	[illegible]			0.76	[illegible]
		322475	8	72	1440.94	12.41[illegible]	82360	62640	[illegible]			0.76	[illegible]

[illegible]	IMPACT TEST NOTCH TYPE/ORIENTATION/TEMPERATURE(°C)/SIZE [illegible]							NON METALIC INCLUSION	GRAIN SIZE	[illegible] TEST
	[illegible]	[illegible]	% SHEAR AREA	LE	AK2 (J)	[illegible]	% SHEAR AREA	LE		[illegible]
										[illegible]
					/					[illegible]
					/					[illegible]
										[illegible]

[illegible]

SAMPLE ORIENTATION: L--[illegible] T--TRANSVERSE
SAMPLE TYPE: S---STRIP C--[illegible] F--FULL-SECTION
Q&T--QUENCHING AND TEMP[illegible]
AK2--ABSORB ENERGY FOR [illegible]

N--NORMALIZING
A--ANNEALING
AV--AVERAGE
LE--SIDE EXPANSION

[illegible] EXPANDED
[illegible] TROLLER
[illegible] ALIZING AND TEMPERING

MILL TEST REPORT

Add: 10 Dahuanlian [illegible] Jiaozuo,P.R.China
P.C:454001
Tel and Fax: 1867[illegible]
E-mail: hstec@sbyc.cn

CUSTOMER: [illegible]
CERTIFICATE NO.: [illegible]
CONTRACT NO.: 110020404-1
P.O.NO.: PO-3164224-OR-2100-A (LOT: [illegible])
INV. NO.: SEATID5-00736
DATE: 2016-4-16
PAGE: 2/3
PRODUCT: SEAMLESS CARBON STEEL PIPE FOR OIL AND GAS
DELIVERY CONDITION: [illegible]
SPECIFICATION: SEE SPECIFICATION NOTE
HEAT TREATMENT: [illegible]
MARK: B.X-2
DIMENSIONS: [illegible]
TOTAL PIECES: 108
TOTAL WEIGHT: 21612 KG
TEST UNIT: [illegible]

CHEMICAL COMPOSITION(%)

Type	C	Si	Mn	Cr	Mo	W	Cu	Ni	P	S	Al	V	Nb	Ti	Zr	Sb	B	S	V	B	Ca	[illegible]	SUM1	SUM2	RT	[illegible]
	*100										1000								*10000			1000				
H	20	34	114	35	6		59	26	13	[illegible]			45	18					46	31	2		48.1	66.1		2
P	20	33	112	53	7		76	24	16	[illegible]			41	14					35	47	2		45.7	59.7		3.7
P	20	33	113	54	6		76	25	16	[illegible]			43	14					33	44	2		47.4	61.4		3.7
H	20	34	114	35	8		59	26	13	[illegible]			45	18					46	31	2		48.1	66.1		3.7
[illegible]	[illegible]																									
P	20	33	113	53	7		75	25	16	[illegible]			42	14					31	47	3		46.7	60.7		3.7
H																										
P																										
P																										
H																										
P																										
P																										
H																										
P																										
P																										

NON-DESTRUCTIVE TEST

	PIPE BODY	END	END SCREAD/GROOVES
	EMI	UT	
			UT/AGLE
			DIMENSION
	ACCEPTABLE	ACCEPTABLE	N/A
			PTABLE
		ACCEPTABLE	
		N/A	
		ACCEPTABLE	
			PTABLE

[illegible] ANALYSIS P--PRODUCT ANALYSIS CE--EQUIVALENT [illegible] CARBON R--RATIO [illegible] SUM1=Cr+Cu+Mo+W+V SUM2=Nb+V [illegible]

[illegible] Cr+Cu+Mo+V/5+(Cu+Ni)/15 CEPCM=C+Si/30+(Mn+Cu+Cr)/20+(Ni+Cu+Mo+V)/15 [illegible] Al/1.7/5*B [illegible]

[illegible] UT-ASTM E213 EMI-ASTM E570 MPI-ASTM E709

[illegible] UT LEVEL L0/L2/L2,NOTCH DEPTH IS 12.5%/10%/5% THICKNESS OF NOMINAL WALL THICKNESS.

HENGYANG VALIN
STEEL TUBE CO.,LTD

MILL TEST REPORT

(ACCORDING TO EN10204 3.1)

Address: [illegible] Hengyang
City/Zip: [illegible] P.C. 421001
Tel/Fax: [illegible] 8873729
E-mail: [illegible] steeltube.com

CUSTOMER	FRANKLIN		CERTIFICATE NO	[illegible]	
[illegible]	11002049-1	P.O.NO.	PO 3364, [illegible] (TOTAL)	L/C NO: 4FAHD5-00286	DATE [illegible]-16 PAGE [illegible]
[illegible]	SEAMLESS CARBON STEEL PIPE FOR OIL AND GAS [illegible]		DELIVERY CONDITION		
SPECIFICATION	SEE SPECIFICATION NOTE	HEAT [illegible]			
GRADE	B.X42		DIMENSIONS		
TOTAL SIZE		TOTAL PIECES: 108	TOTAL LENGTH 2161.42		[illegible]

REMARK: 1.ORIGIN:MADE IN CHINA 2.ALL ELEMENTS TO BE LISTED.

[illegible] 3B-2012/A106B-2011, ASME SA53B-2010, [illegible] 2010 [illegible]
[illegible] EDITION, NACE MR-0175-2009 (FOR HARDNESS [illegible]

[illegible] material herein described has been manufactured in accordance [illegible] standards and specifications required in your order and [illegible] requirements

This certificate [illegible] computerized system and it is valid with electronic signature [illegible] the owner of the certificate would release a copy of [illegible] to the original one taking upon himself the responsibility [illegible] unavailed or not allowed use

[illegible] fication will be subject to the law

[illegible] authenticity of this certificate ,please do not hesitate to contact Hengyang [illegible] Steel Tube CO.,LTD, E-mail: [illegible] steeltube.com

[illegible]

Quality Manager

Certificate [illegible]

SA 516-70

Material Conforms to
ASME Section II Edition 2015
Certified By: C
Date: 2015-07-27

검 사 증 명 서
MILL TEST CERTIFICATE

현대제철주식회사
HYUNDAI STEEL COMPANY

충청남도 당진시 송악읍 송악로 1480
1480 Songak-ro, Songak-eup, Dangjin-si, Chungcheongnam-do, Korea

수요자 Customer		증명서 번호 Certificate No.	
주문자 Contractor		발행일자 Date of Issue	2015-07-27

품명 Description	수량 Quantity	중량 Weight	제품번호 Product No.	열처리 Heat Treatment	인장시험 Tensile Test				충격시험 Impact Test		경도 Hardness	화학성분 Chemical Composition														기타 Others
					YP	TS	EL	시험편	시험온도	흡수에너지		C	Si	Mn	P	S	Cu	Ni	Cr	Mo	V	Nb	Ti	B	Ca	
					MPa	MPa	%		℃	J		%	%	%	%	%	%	%	%	%	%	%	%	%	%	

Purcha... DE FRANK... DIVISION OF NOV WILSON CANADA ULC

INSPECTIC... CERTIFICATE

TO EN... ISO 10474 3.1B

E-No.: ... Order No.: ... Job No.: ...

4D-348 ... 02-OR-2100

No.	Actual size		Specification for Material made from Stainless Steel Pipe ASTM ...-13/ASME SA234-13 Gr.WPB CSA Z245.1-13 Gr.241 CAT... OS NACE MR0175/ISO 15156-2 ...		Specification for Inspection ASME B16.9-2012, 316.25-2012	Visual Exam...	Dimension ...
			Product & Size	Quantity	Heat Treatment (Note 1)		
1	HB...24-1...	...-2	C WPB 10 STD	75/200	N		
2	HB...28-1...	...-1	C WPB 12 STD	3/50	N		
3	HB...27-1...	...	C WPB 12 STD	42/50	N		
4	HB...27-1...	...	C WPB 6 STD	150	N		
5							

	Specification	Chemical Composition %										Tension Test *2			
		Si	Mn	P	S	Cu	Ni	Cr	Mo	Nb	C.E.	YS	TS	E	
		x 100	x 100	x 1000	x 1000	00	x 100	x 100	...	000	x 100	MPa		%	
	Min.											240	415	30	ASTM ...
	Max.	10	29										655		
	Base Material Heat No.		106	50	31	40	40	40	15	20	42				
1	SF89725	34	108	14	3		0.9	3			37	320	514	42	
2	SF89725	34	108	14	3		0.9	3			37	320	514	42	
3	...18	28	107	12	4		5	1	TR	TR	39	336	522	42	
	...7610S	17.7	81	7	2	3	4	4	2	2	36	295	455	39	
5															

Note 1) A : Hot formed with fi... between 620 °C-980 °C, Air Cooling ... formalizing 910 °C±0.5 HR. Air Cooling

The ... was manufactured ... inspected in accordance with the specification ... and was found to meet the requirements.

C.E. = C+[(Mn/6+Si/24+Cu/15+... (C+...+V+Nb)/5+5B) (CSA Spec.) TR : Trace to TR<0.0002

... MAGNETIC PARTICLE EXAMINATION FOR THE ...

*1 : "T" symbolized wall thi... *2 : YS Yield strength TS = Tensile strength E = Elongation

We hereby certify that the pr... ...ed herein has been manufactured in accordance with the specification ... and also with the purchaser ... and that the test results shown herein are correct.

Note for VPB: For each reduction ... the specified carbon maximum, an increase of 0.06% manganese above the specified ... will be permitted, up to a maximum of 1.35% (Ref. ...)

Quality ... Manager

... Material ...

... Steel ...

SHIP TO: CCTF CORPORATION (EDMONTON)
5407 - 53RD AVE.
EDMONTON AB T6B 3G2
Canada

ITEM	QUANTITY	LOT NO.	GRADE OR SPECIFICATION NO. CHEMICAL ANALYSIS, PHYSICAL PROPERTIES, REMARKS:
36	720	6882	2 3M A105N COUP T SA/A105N
7523596			Al 0.034 C 0.210 Co 0.004 Cr 0.050 Cu 0.090 Mn 0.990 Mo 0.007 N 0.004 Nb 0.012 Ni 0.040 P 0.005 S 0.019 Si 0.230 V 0.003 CE(Long Formula) = 0.40 T/S(PSI) 73,977 Y/S(PSI) 50,463 EL(%) 35.40 RA(%) 61.31 Brinell 135 BHN 135 BHN
		6915	2 3M A105N COUP T SA/A105N
[illegible]			[illegible]
62	888	6876	2 3M/6M A105N HXPL T SA/A105N
7522614			Al 0.025 C 0.210 Co 0.003 Cr 0.030 Cu 0.040 Mn 1.060 Mo 0.013 N 0.002 Nb 0.017 Ni 0.050 P 0.004 S 0.021 Si 0.230 V 0.003 CE(Long Formula) = 0.40 T/S(PSI) 75,312 Y/S(PSI) 52,651 EL(%) [illegible] RA(%) [illegible] Brinell 135 BHN 135 BHN
		6309	2 3M/6M A105N HXPL T SA/A105N
7522614			Al 0.022 C 0.200 Co 0.002 Cr 0.050 Cu 0.040 Mn 1.020 Mo 0.004 N 0.003 Nb 0.013 Ni 0.020 P 0.009 S 0.019 Si 0.230 V 0.003 CE(Long Formula) = 0.39 T/S(PSI) 72,669 Y/S(PSI) 47,510 EL(%) 33.50 RA(%) 62.56 Brinell 135 BHN 135 BHN

I certify that the data on this sheet is a true copy taken from our records of material furnished us by the production mill, or as obtained by additional laboratory checks.

By
Kenzie Grove
QUALITY PROCESS MANAGER

GMTR: REV2



[illegible]

[illegible]

[illegible]

[illegible]

[illegible]

[illegible]

SHIP TO: CCTF CORPORATION (EDMONTON)
5407 - 53RD AVE.
EDMONTON AB T6B 3G2
Canada

ITEM	QUANTITY	LOT NO.	GRADE OR SPECIFICATION NO. CHEMICAL ANALYSIS, PHYSICAL PROPERTIES, REMARKS:

1. THE FITTINGS SUPPLIED ARE IN ACCORDANCE WITH PURCHASE ORDER SPECIFICATIONS.
2. THE MATERIAL SUPPLIED IDENTIFIED AS A105N WAS NORMALIZED IN ACCORDANCE WITH ASTM A105 HEAT TREATING REQUIREMENTS.
3. THE MATERIAL SUPPLIED AS A105N MEETS THE REQUIREMENTS OF BOTH NACE MRO103-2010 AND NACE MRO175/ISO 15156-2.
4. CERTIFYING ASTM A105-13 / ASME SA105-10 EDITION
5. THE PRODUCT SUPPLIED WAS [illegible] IN ACCORDANCE WITH [illegible] EDITION [illegible]
6. THE UNIT OF MEASURE FOR TENSILE AND YIELD (0.2%) STRENGTH ARE REPORTED IN PSI
7. ELONGATION TEST RESULTS ARE OBTAINED USING STANDARD ROUND SPECIMEN, 2 INCH OR 50 MM GAGE LENGTH

I certify that the data on this sheet is a true copy taken from our records of material listed us by the production mill, or as obtained by additional laboratory checks

by [signature]
Kenzie Grove
QUALITY PROCESS MANAGER

CMTR REV2

INSPECTION CERTIFICATE

Certificato d'ispezione

	Issued on / Emesso il: 08/10/2014	Customer / Cliente: [illegible]		Job n. / Comm. n.	Page n. / Pagina n. 3 of 12
	EN 10204:2005 Type / Tipo 3.2			Purchase order / Ordine	Project/Order n. progetto/ordine 1826580
			CALGARY, ALBERTA, T2T 5N2 - CANADA		

DESCRIPTION / DESCRIZIONE

Pos.	Qty.	Customer code / Codice cliente	Material / Materiale	Size / Misura	Process / Processo
[illegible]	[illegible]	1238[illegible]	A/SA105-13	[illegible]	MEGA LET S. 3000 NPT A/SA105N 1x0-36
[illegible]	[illegible]	233463	A/SA105-13	[illegible]	MEGALET S. 3000 NPT A/SA105N 1/2x1.1/4-2.1/2
[illegible]	[illegible]	256029	A/SA105-13	[illegible]	MEGALET S. 3000 NPT A/SA105N 1/4x1.1/4-36
[illegible]	[illegible]	233465	A/SA105-13	[illegible]	MEGALET S. 3000 NPT A/SA105N 1.1/2x2.1/2-3
[illegible]	[illegible]	233464	A/SA105-13	[illegible]	MEGALET S. 3000 NPT A/SA105N 1.1/2x6-10

[illegible] / CATALOGUE REFERENCES TO OTHER CERTIFICATES / Dettagli di trattamento termico - riferimenti ad altri certificati — RAW MATERIAL CERTIFICATES / Certificati materiale grezzo

MATERIAL PRODUCED BY ELECT.FURNACE-NORMALIZED AT 900 C COOLED IN STILL AIR.	ASI"591055MEGA
MATERIAL PRODUCED BY ELECT.FURNACE-NORMALIZED AT 900 C COOLED IN STILL AIR.	ASI"585785MEGA
MATERIAL PRODUCED BY ELECT.FURNACE-NORMALIZED AT 900 C COOLED IN STILL AIR.	ASI"570217MEGA
MATERIAL PRODUCED BY ELECT.FURNACE-NORMALIZED AT 900 C COOLED IN STILL AIR.	ASI"590855MEGA
MATERIAL PRODUCED BY ELECT.FURNACE-NORMALIZED AT 900 C COOLED IN STILL AIR.	ASI"587010MEGA

| Pos. | Heat / Colata | TENSILE TEST / Trazione | | | | | | CHEMICAL ANALYSIS / Analisi chimica | | | | | |

Sold To:

Ship To:

63A021210

Customer P.O.		Sales Order	
Product Group	Merchant Bar Quality	Part Number	
Grade	NUCOR MULTIGRADE	Lot #	SE1410562102
Size	3/8x6" Flat	Heat #	SE14105621
Product	3/8x6" Flat 20' NUCOR MULTIGRADE	B.L. Number	S1-477291
Description	NUCOR MULTIGRADE	Load Number	S1-307457
Customer Spec		Customer Part #	

I hereby certify that the material described herein has been manufactured in accordance with the specifications and standards listed above and that it satisfies those requirements.

Roll Date: 11/15/2014 Melt Date: 11/4/2014 Qty Shipped LBS: 9,800 Qty Shipped Pcs: 64

C	Mn	P	S	Si	Cu	Ni	Cr	Mo	V	Cb	Sn
0.16%	0.96%	0.010%	0.043%	0.20%	0.34%	0.12%	0.14%	0.028%	0.0150%	0.002%	0.010%

Yield 1: 51,551psi

Yield 2: 50,796psi

Tensile 1: 71,130psi

Tensile 2: 72,211psi

Elongation: 32% in 8"(% in 203.3mm)

Elongation 31.3% in 8"(% in 203.3mm)

Specification Comments: NUCOR MULTIGRADE MEETS THE REQUIREMENTS OF: ASTM A36/A36M-12, ASTM A529/529M-05 GR50, ASTM A572/572M-12A GR50, ASTM A709/709M-13 GR36/GR50, CSA G40.21-13 GR44W(300W)/GR50W(350W), AASHTO [illegible] M270M-10 GR36/GR50, ASME SA36/SA36M-07. MEETS REPORTING REQUIREMENTS OF EN10204 SEC 3.1

ALL MANUFACTURING PROCESSES OF THE STEEL MATERIALS IN THIS PRODUCT, INCLUDING MELTING, HAVE OCCURRED WITHIN THE UNITED STATES. ALL PRODUCTS PRODUCED ARE WELD FREE. MERCURY, IN ANY FORM, HAS NOT BEEN USED IN THE PRODUCTION OR TESTING OF THIS MATERIAL

This Material Conforms to
ASME Section II Edition 2013
Initialed By: Feb 06/2015
Date: Feb 06/2015

Erik Nissen
Division Metallurgist

NBMG 10 January 1, 2012

3/8 x 6

HEAT # SE14105621

[illegible]

CUSTOMER
ORDER NO.: 4896025-00

SHIP TO: CCTF CORPORATION (EDMONTON)
5407 - 53RD AVE.
EDMONTON AB T6B 3G2
Canada

[illegible]

ITEM	QUANTITY	LOT NO.	GRADE OR SPECIFICATION NO. CHEMICAL ANALYSIS, PHYSICAL PROPERTIES, REMARKS:
14	250	59529	10-6X1 3M A105N THRD T SA/A105N
7551673			Al 0.027 C 0.210 Cb 0.000 Co 0.004 Cr 0.040 Cu 0.050 Mn 1.020 Mo 0.006 Nb 0.014 Ni 0.013 P 0.006 S 0.021 Si 0.210 V 0.004 CE(Long Formula) = 0.39 T/S(PSI) 73,011 Y/S(PSI) 48,661 EL(%) 36.10 RA(%) 64.90 Brinell 132 BHN 135 BHN
[illegible]	[illegible]	[illegible]	[illegible]
[illegible]			[illegible] CE(Long Formula) = 0.39 T/S(PSI) [illegible] Y/S(PSI) [illegible] EL(%) [illegible] RA(%) [illegible] Brinell 135 BHN 132 BHN
17	100	[illegible]	10-3 X 3/4 6000 A105N THRD T SA/A105N
7552106			Al 0.018 C 0.210 Cb 0.000 Co 0.003 Cr 0.040 Cu 0.050 Mn 1.010 Mo 0.005 Nb 0.009 Ni 0.020 P 0.010 S 0.017 Si 0.220 V 0.004 CE(Long Formula) = 0.39 T/S(PSI) 74,226 Y/S(PSI) [illegible] EL(%) [illegible] RA(%) [illegible] Brinell [illegible] BHN [illegible] BHN
18	25	59096	36-14 X 3/4 3000 A105N SOCK S SA/A105N
7559405			Al 0.018 C 0.200 Co 0.004 Cr 0.070 Cu 0.130 Mn 0.980 Mo 0.008 N 0.004 Nb 0.012 Ni 0.040 P 0.012 S 0.019 Si 0.190 V 0.003 CE(Long Formula) = 0.39 T/S(PSI) 73,000 Y/S(PSI) 49,900 EL(%) 31.00 RA(%) 63.00 Brinell 143 BHN 140 BHN

We certify that the data on this sheet is a true copy taken from our records of material furnished to by the production mill, or as obtained by additional laboratory checks

Meloney Specht
QUALITY PROCESS MANAGER

[illegible]

[illegible]

[illegible]

[illegible]

CUSTOMER
ORDER NO.: 1396025 00

SHIP TO: CCTF CORPORATION (EDMONTON)
5407 - 53RD AVE.
EDMONTON AB T6B 3G2
Canada

[illegible]

ITEM	QUANTITY	LOT NO.	GRADE OR SPECIFICATION NO. CHEMICAL ANALYSIS, PHYSICAL PROPERTIES, REMARKS

1. THE FITTINGS SUPPLIED ARE IN ACCORDANCE WITH PURCHASE ORDER SPECIFICATIONS.
2. THE MATERIAL SUPPLIED IDENTIFIED AS A105N WAS NORMALIZED IN ACCORDANCE WITH ASTM A105 HEAT TREATING REQUIREMENTS.
3. THE MATERIAL SUPPLIED AS A105N MEETS THE REQUIREMENTS OF BOTH NACE MRO103-2010 AND NACE MRO175/ISO 15156-2.
4. [illegible]
5. [illegible] EDITION [illegible] (EUROPEAN STANDARD)
6. [illegible] REPORTED IN PSI.
7. ELONGATION TEST RESULTS ARE OBTAINED USING STANDARD ROUND SPECIMEN, 2 INCH OR 50 MM GAGE LENGTH.

We certify that the data on this sheet is a true copy taken from our records of material furnished us by the production mill, or as obtained by additional laboratory checks.

[illegible]

Meloney Specht
QUALITY PROCESS MANAGER

[illegible]

PF2100 FIELD GUIDE REV 1.8.0

BURNER MANAGEMENT SYSTEM

WARNINGS

THIS EQUIPMENT IS SUITABLE FOR USE IN CLASS 1, DIVISION 2, GROUPS ABCD OR NON-HAZARDOUS LOCATIONS ONLY.

WARNING: EXPLOSION HAZARD
DO NOT DISCONNECT WHILE CIRCUIT IS LIVE UNLESS AREA IS KNOWN TO BE NON-HAZARDOUS OR EQUIVALENT

WARNING: EXPLOSION HAZARD
SUBSTITUTION OF COMPONENTS MAY IMPAIR SUITABILITY FOR CLASS 1, DIVISION 2.

DO NOT SERVICE UNLESS AREA IS KNOWN TO BE NON-HAZARDOUS

DO NOT OPEN WHEN ENERGIZED

INSTALLATION & USE MUST CONFORM TO THE DIRECTIONS IN THIS MANUAL

SYSTEM MUST BE PROPERLY CONNECTED TO EARTH-GROUND FOR EFFECTIVE OPERATION OF FLAME DETECTION CIRCUITRY

ELECTRICAL DEVICES CONNECTED TO THE CONTROLLER MUST MEET CERTAIN ELECTRICAL STANDARDS AND BE WITHIN VOLTAGE LIMITS

REPLACEMENT FUSES MUST BE CERAMIC AND OF CORRECT RATING

HW & FW VERSIONING

This version of the manual was written for use with PF2100 systems that have the following hardware and firmware versions.

ITEM	*HW VERSION*	*FW VERSION*
Door Card	v1.71	E1.8.115
Terminal Card	v1.7	E1.8.101
4-20mA Card	v3.0	v4.0
Modbus Card	v2.0	v4.0

System hardware and firmware versions can be found printed on separate labels inside of the enclosure on each circuit board. (Sections 1.5, 2.4)

Please refer to the Profire Energy Inc. website for the latest documentation.

APPROVALS

CSA 22.2 No. 199-2007
ANSI Z21.20-2007
UL1998-2004

Class 1, Div 2
Grp ABCD
IP54
CSA Type 4x

C US
MC#248705

CSA C22.2 No. 0-M91
CSA C22.2 No. 0.4-04
CSA C22.2 No. 94-91
CSA C22.2 No. 142-M1987
CSA C22.2 No. 213-M1987
CSA E60079-0:2007
CSA E60079-15:2005
UL 508, 17th Edition
ANSI-ISA-12.12.01-2007
UL 60079-0:2005
UL 60079-15:2002

Introduction 1
Internal Diagram 2
Terminal Card Diagram 3
Terminal Descriptions 4-7
Menu Map 8-9
    Setpoints (Menu 1) 10
    System Setup (Menu 4) 10-12
    Control Setup (Menu 5) 12-13
    Expansion Cards (Menu 6) 13-14
Common Issues & Solutions 15-17
Shutdown Messages 18-20
Alarm Codes 21-22
Warning Messages 22-23
Flame Detection Troubleshooting Guide 24-25
Thermocouple Troubleshooting Guide 26

Introduction

This Field Guide contains a brief summary of the PF2100 including terminal descriptions, menu descriptions, and basic trouble-shooting information. For a complete and detailed discussion of all features, please refer to the PF2100 User Guide. The User Guide is available for download from **www.profireenergy.com** and may also be ordered in hard copy.

The PF2100 BMS (Burner Management System) is an electronic control and monitoring system designed for use on a wide array of natural draft burner industrial applications. It provides electronic pilot ignition, flame detection, temperature control, and remote monitoring. In addition to being an extremely useful tool, it improves safety by preventing the flame from being lit under unsafe conditions.

The PF2100 is available in two configurations:
BASE MODEL and **INTERNAL COIL MODEL**.

The Base Model is for use with externally mounted ignition coils. This is useful when the controller must be mounted more than 3m (15ft) away from the burner. An external ignition coil can be purchased separately from Profire for use with this model.

The Internal Coil model includes a built-in ignition coil and can be used whenever the controller can be mounted less than 3m (15ft) away from the burner.

Both of these models can be further enhanced by adding one of two optional expansion cards:

4-20mA Expansion Card (**1PS166**)
Modbus Expansion Card (**1PS167**)

BASE MODELS

E0000 Base Model
E0400 Base Model with 4-20mA Expansion Card
E0M00 Base Model with Modbus Expansion Card
E04M0 Base Model with 4-20mA Expansion Card and Modbus Expansion Card

INTERNAL COIL MODELS

EC000 Internal Coil Model
EC400 Internal Coil Model with 4-20mA Expansion Card
ECM00 Internal Coil Model with Modbus Expansion Card
EC4M0 Internal Coil Model with 4-20mA Expansion Card and Modbus Expansion Card

Internal Diagram

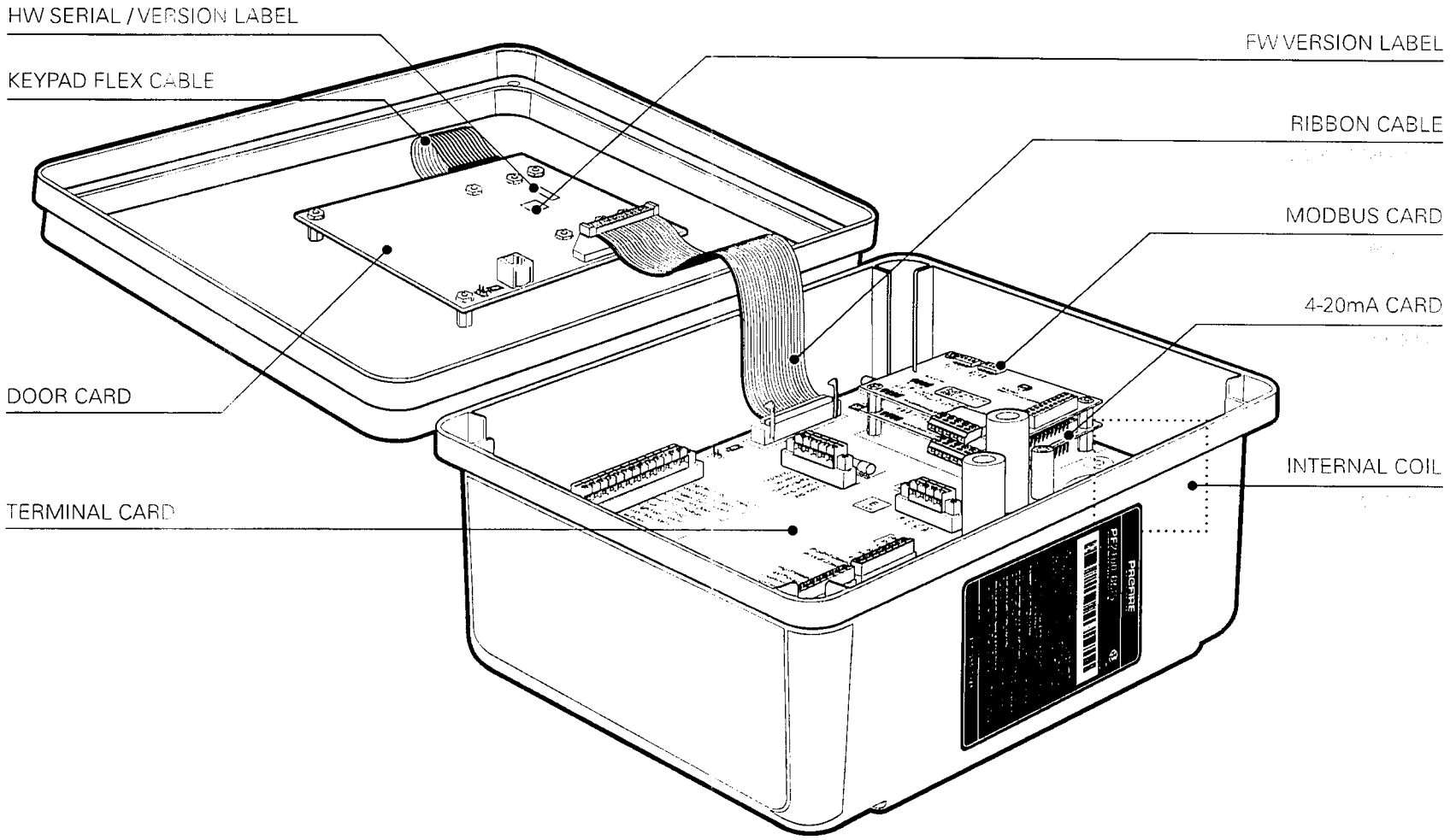

Terminal Card Diagram

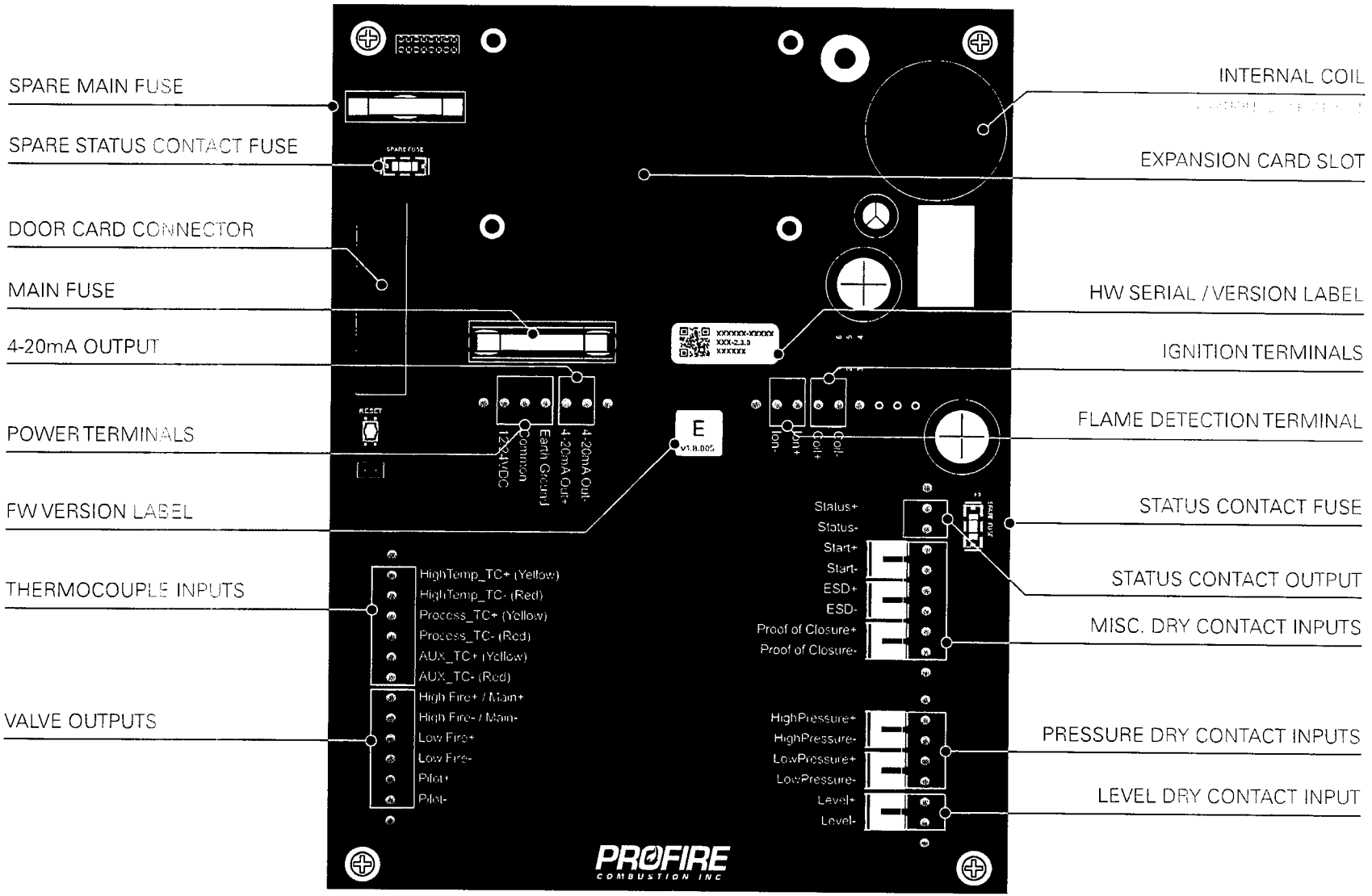

Terminal Descriptions

This table provides a brief description of each terminal and references to further detail.

TERMINAL	EXPECTED CONNECTIONS	DESCRIPTION	SECTION
12/24VDC	Input power from a DC source	Input power 10VDC-28VDC, 5A MAX	2.6.1
Common	Ground back to DC source	Internally connected to EGND	2.6.1
EGND	Earth Ground		2.6.1
4-20mA Out +	Proportional Valve positive terminal or PLC 4-20mA positive input	This output can be used for either Proportional Valve Control or echoing the Process Temperature to a PLC. A resistance of 120Ω to 250Ω is expected.	2.6.2, 2.7.3
4-20mA Out -	Ground return for the 4-20mA output		
HighTemp_TC + (YELLOW)	High Temp Thermocouple positive lead	"**TYPE K**" thermocouple must be connected between the "+" and "-" terminals and must not be electrically connected to ground. An uninterrupted connection using "**TYPE K**" thermocouple wire is required for an accurate reading.	2.6.3
HighTemp_TC - (RED)	High Temp Thermocouple negative lead		
Process_TC + (YELLOW)	Process Thermocouple positive lead	"**TYPE K**" thermocouple must be connected between the "+" and "-" terminals and must not be electrically connected to ground. An uninterrupted connection using "**TYPE K**" thermocouple wire is required for an accurate reading.	2.6.3
Process_TC - (RED)	Process Thermocouple negative lead		
AUX_TC + (YELLOW)	Aux Thermocouple positive lead	A "**TYPE K**" thermocouple must be connected between the "+" and "-" terminals and must not be electrically connected to ground. An uninterrupted connection using "**TYPE K**" thermocouple wire is required for an accurate reading.	2.6.3
AUX_TC - (RED)	Aux Thermocouple negative lead		

Terminal Description Continued...

TERMINAL	EXPECTED CONNECTIONS	DESCRIPTION	SECTION
High Fire/Main +	High Fire / Main Valve positive terminal	Solenoid valves must be connected between the "+" and "-" terminals. The negative terminal is not directly connected to ground so a common return wire for the High Fire, Low Fire and Pilot valves cannot be used. Maximum continuous current is 2A. If "Low Power" mode is enabled, a peak load of 4A is permitted.	2.6.2
High Fire/Main -	High Fire / Main Valve negative terminal. Do not connect to ground.		
Low Fire +	Low Fire Valve positive terminal	Solenoid valves must be connected between the "+" and "-" terminals. The negative terminal is not directly connected to ground so a common return wire for the High Fire, Low Fire and Pilot valves cannot be used. Maximum continuous current is 2A. If "Low Power" mode is enabled, a peak load of 4A is permitted.	
Low Fire -	Low Fire Valve negative terminal. Do not connect to ground.		
Pilot +	Pilot Valve positve terminal	Solenoid valves must be connected between the "+" and "-" terminals. The negative terminal is not directly connected to ground so a common return wire for the High Fire, Low Fire and Pilot valves cannot be used. Maximum continuous current is 2A. If "Low Power" mode is enabled, a peak load of 4A is permitted.	
Pilot -	Pilot Valve negative terminal. Do not connect to ground.		
Ion +	Flame Detection positive input. Connect to flame rod or external coil Ion terminal (depending on configuration)	A Kanthal rod should be placed directly in the pilot flame and connected to this input. The pilot assembly must be grounded for the flame detection to function properly. Input is protected from high voltage and can be connected in series with the high voltage terminals of an external ignition coil, allowing a single flame-rod to be used for both ignition and flame detection. A 65VAC signal is applied to the flame rod. The source impedance is very high so there is no danger of sparking.	2.6.4 - 2.6.7
Ion -	Flame Detection negative input. Connect to ground screw on pilot assembly	Ground return for flame detection. Must be connected to the burner housing.	

Terminal Description Continued...

TERMINAL	EXPECTED CONNECTIONS	DESCRIPTION	SECTION
Coil +	Driver for the low voltage primary of the ignition coil.	The primary of the ignition coil should be connected to this terminal. The 12/24VDC input power will be applied for 1 ms and turned off for 50 ms while sparking. This output is protected by a 250mA thermal fuse.	2.6.4 - 2.6.7
Coil -	Ground return for the ignition coil.		
Status +	Connect to PLC positive input contact or other alarm device.	The status "+" and "-" contacts will be closed when the system is running and opened when the system is shutdown. Dry contact output to indicate system status to an external device. ie. PLC. Note that the contacts are DC only and are not internally connected to power or ground. 125VDC, 250mA, 15Ω	2.7.1
Status -	Connect to PLC negative input contact or other alarm device.		
Start +	Remote start input from an external device. ie. PLC.	Dry contact switch is expected. The input is internally pulled up to 9VDC via a 3.75kΩ resistance. Jumper "+" and "-" if not used. All input contacts can use a single common ground return if desired.	2.7.2
Start -	Ground		
ESD +	External Shutdown input, typically plant ESD loop.	Dry contact switch is expected. The input is internally pulled up to 9VDC via a 3.75kΩ resistance. Jumper "+" and "-" if not used. All input contacts can use a single common ground return if desired.	2.7.2
ESD -	Ground		
Proof of Closure +	Proof of Closure from main valve(s).	Dry contact switch is expected. The input is internally pulled up to 9VDC via a 3.75kΩ resistance. Jumper "+" and "-" if not used. All input contacts can use a single common ground return if desired.	2.7.2
Proof of Closure -	Ground		
High Pressure +	Input from a mechanical High Pressure switch.	Dry contact switch is expected. The input is internally pulled up to 9VDC via a 3.75kΩ resistance. Jumper "+" and "-" if not used. All input contacts use a single common ground return if desired.	2.7.2
High Pressure -	Ground		
Low Pressure +	Input from a mechanical Low Pressure switch.	Dry contact switch is expected. The input is internally pulled up to 9VDC via a 3.75kΩ resistance. Jumper "+" and "-" if not used. All input contacts can use a single common ground return if desired.	2.7.2
Low Pressure -	Ground		

Terminal Description Continued...

TERMINAL	EXPECTED CONNECTIONS	DESCRIPTION	SECTION
Level +	Input from a float-switch mounted in the bath.	Dry contact switch is expected. The input is internally pulled up to 9VDC via a 3.75kΩ resistance. Jumper "+" and "-" if not used. All input contacts can use a single common ground return if desired.	2.7.2
Level -	Ground		

Menu Map

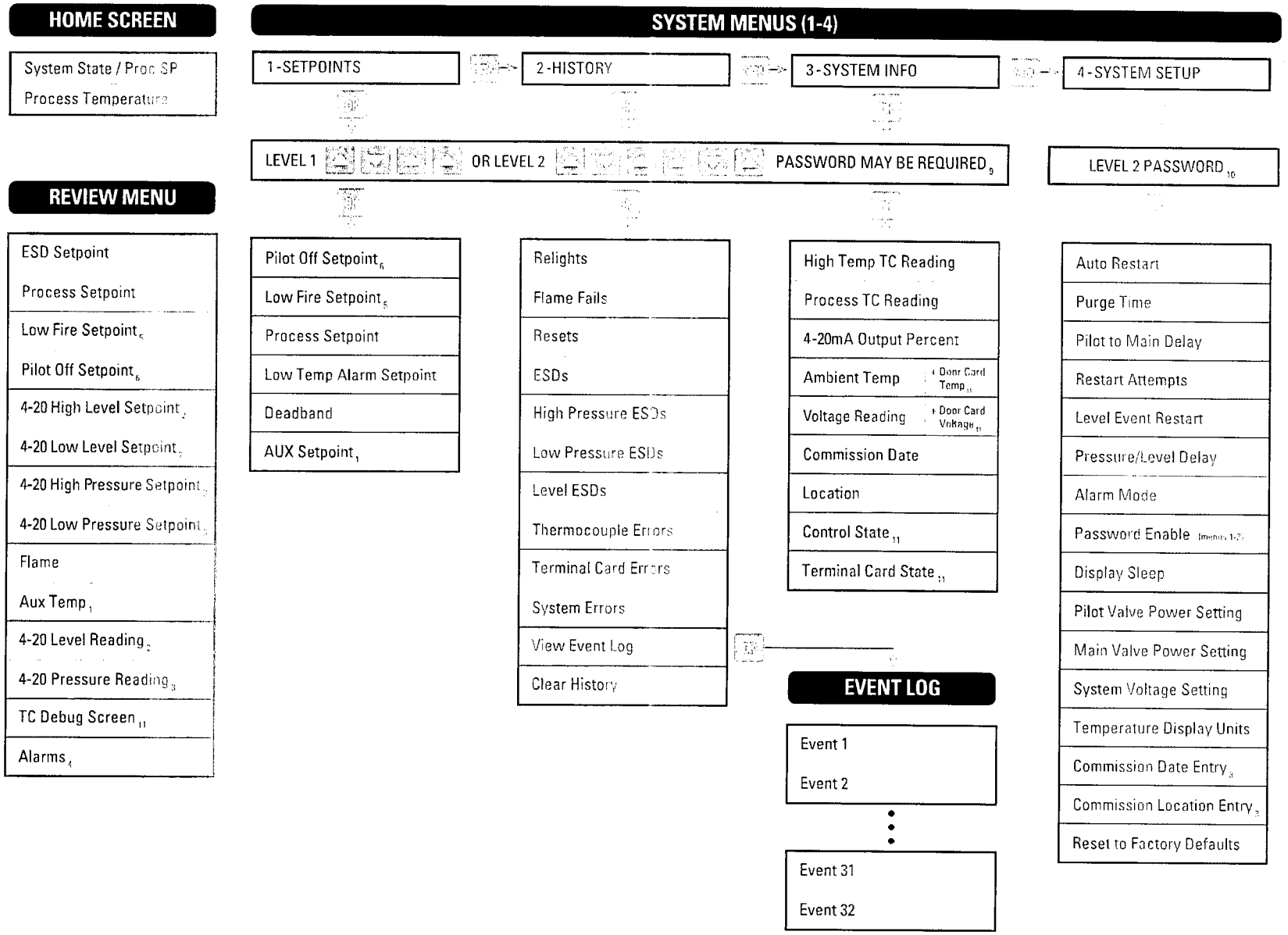
HOME SCREEN
System State / Proc SP
Process Temperature
REVIEW MENU
ESD Setpoint
Process Setpoint
Low Fire Setpoint 6
Pilot Off Setpoint 6
4-20 High Level Setpoint 2
4-20 Low Level Setpoint 2
4-20 High Pressure Setpoint 3
4-20 Low Pressure Setpoint 3
Flame
Aux Temp 1
4-20 Level Reading 2
4-20 Pressure Reading 3
TC Debug Screen 11
Alarms 4
SYSTEM MENUS (1-4)
1-SETPOINTS
2-HISTORY
3-SYSTEM INFO
4-SYSTEM SETUP
LEVEL 1
OR LEVEL 2
PASSWORD MAY BE REQUIRED 9
LEVEL 2 PASSWORD 10
Pilot Off Setpoint 6
Low Fire Setpoint 5
Process Setpoint
Low Temp Alarm Setpoint
Deadband
AUX Setpoint 1
Relights
Flame Fails
Resets
ESDs
High Pressure ESDs
Low Pressure ESDs
Level ESDs
Thermocouple Errors
Terminal Card Errors
System Errors
View Event Log
Clear History
High Temp TC Reading
Process TC Reading
4-20mA Output Percent
Ambient Temp + Door Card Temp 11
Voltage Reading + Door Card Voltage 11
Commission Date
Location
Control State 11
Terminal Card State 11
EVENT LOG
Event 1
Event 2
Event 31
Event 32
Auto Restart
Purge Time
Pilot to Main Delay
Restart Attempts
Level Event Restart
Pressure/Level Delay
Alarm Mode
Password Enable
Display Sleep
Pilot Valve Power Setting
Main Valve Power Setting
System Voltage Setting
Temperature Display Units
Commission Date Entry 3
Commission Location Entry 3
Reset to Factory Defaults

SYSTEM MENUS (5-7)

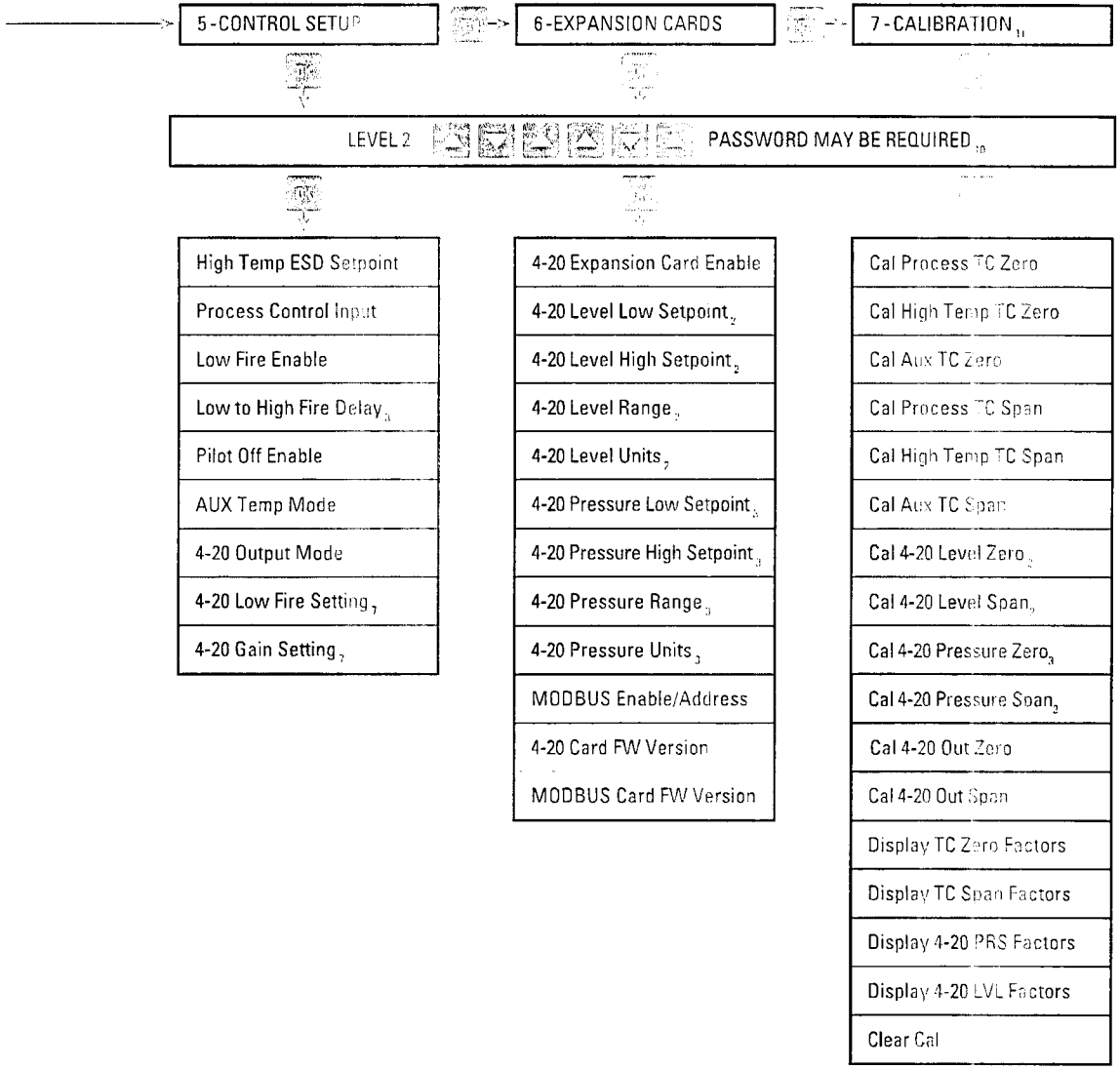

SCREEN	NAVIGATION	ADJUSTMENTS
HOME SCREEN (AUTO)	N/A	
HOME SCREEN (MANUAL)	TO ENTER REVIEW	
REVIEW	TO CYCLE TO RETURN HOME	
EVENT LOG	TO CYCLE TO RETURN HOME	
SYSTEM MENUS	TO CYCLE TO RETURN HOME	
ANY	TOGGLES MODES (AUTO/MANUAL) CHECK FW/HW/SW VERSION & ENTER DEBUG MODE PRESS AND HOLD FOR 5 SEC TO EXIT DEBUG MODE, LOCK MENUS AND RETURN HOME	

Will also adjust Pilot Off and Low Fire Setpoint if enabled.

FOOTNOTES

1 Hidden when Aux Thermocouple is disabled in Menu 5.
2 Hidden when 4-20 Input Card is disabled in Menu 6 or LVL DIP Switch disabled on card.
3 Hidden when 4-20 Input Card is disabled in Menu 6 or PRS DIP Switch disabled on card
4 Hidden when No Alarms are present.
5 Hidden when Low Fire is disabled in Menu 5.
6 Hidden when Pilot Off is disabled in Menu 5.
7 Hidden when 4-20 Output Mode in Menu 5 – "Temperature Out."
8 Edit fields using arrow keys. Advance fields using OK.
9 Required if enabled in Menu 4, and after password times out.
10 Required after password times out.
11 Viewable in Debug Mode.

Setpoints (MENU 1)

This menu is used to adjust the Process Control Setpoints.

MENU MAP	ON SCREEN	BRIEF DESCRIPTION	RANGE	DEFAULT SETTING	SECTION
Pilot Off Setpoint	Pilot Off Setpnt	Adjusts the temperature at which the Pilot Valve will turn off when Pilot Off is enabled.	1 to 1349°C (34 to 2460°F)	85°C (185°F)	3.4.10
Low Fire Setpoint	Low Fire Setpnt	Adjusts the temperature at which the Low Fire Valve will turn off when Low Fire is enabled.	2 to 1349°C (36 to 2460°F)	Hidden, 85°C (185°F)	3.4.10
Process Setpoint	Proc Setpnt	Adjusts the temperature at which the High Fire/Main Valve will turn off	1 to 1349°C (34 to 2460°F)	80°C (176°F)	3.4.10
Low Temp Alarm Setpoint	Low Temp Alarm Setpnt	Adjusts the temperature where the Status Contact will close, if enabled.	Disabled, 1 to 1349°C (34 to 2460°F)	Disabled	3.4.10
Deadband	Deadband	Adjusts the Deadband. Used with the Process Setpoint and sometimes Low Fire and Aux Setpoints.	1 to 150°C (1 to 240°F)	2°C (3°F)	3.4.10
Aux Setpoint	AUX Setpnt	Adjusts the Auxiliary Setpoint	0 to 1350°C (32 to 2462°F)	Hidden, 20°C (68°F)	3.4.10

System Setup (MENU 4)

This menu contains various optional system settings. It cannot be accessed while the PF2100 is running.

MENU MAP	ON SCREEN	BRIEF DESCRIPTION	RANGE	DEFAULT SETTING	SECTION
Auto Restart	Auto Restart	Enables system to restart from a power failure, low pressure, or high voltage event	On/Off	Off	3.4.11

System Setup (MENU 4) Continued...

MENU MAP	ON SCREEN	BRIEF DESCRIPTION	RANGE	DEFAULT SETTING	SECTION
Purge Time	Purge Time	Adjusts the time from all valves closed to Pilot relight attempts	10- 900 sec	30 sec	3.4.13
Pilot to Main Delay	Pilot to Main Delay	Adjusts the time from Pilot proven to Main Valve opening	5- 600 sec	15 sec	3.4.13
Restart Attempts	Restart Attempts	Adjusts the number of Restart Attempts after an unexpected flame failure before a shutdown	0- 3	3	3.4.11
Level Event Restart	Level Event Restart	Enables recovery from a Low Level event	On/Off	Off	3.4.11
Pressure/Level Delay	PRS/LVL Delay	Pressure and Level shutdown delay	On/Off	Off	3.4.13
Alarm Mode	Alarm Mode	Adjusts the behaviour of Status Contact relative to Start Contact	Alarm when Off, No Alm When Off	No Alm when Off	3.4.3
Password Enable	Password	Enable Password Protection (Menu 1-3)	On/Off	Off	3.4.8
Sleep Mode for the Display	Display Sleep	Enable Sleep Mode for the Display	Never, After 10 Min	Never	3.4.6
Pilot Valve Power Setting	Pilot Solenoid PWM	Adjusts the Pilot Valve PWM duty cycle	Off, 80%, 60%, 40%, 20%	60%	3.4.14
Main Valve Power Setting	Main Solenoid PWM	Adjusts the Main Valve PWM duty cycle	Off, 80%, 60%, 40%, 20%	60%	3.4.14
System Voltage Setting	System Voltage	Configures the expected input voltage for the system	12V, 24V	12V	3.4.12
Temperature Display Units	Temp Units	Configures the temperature units displayed by the system	Fahrenheit, Celsius	Celsius	3.4.6
Commission Date Entry	Commission Date	Set the date that the system was commissioned	DD-MMM-YYYY	01-JUN-2012	3.4.5

System Setup (MENU 4: Continued...

MENU MAP	ON SCREEN	BRIEF DESCRIPTION	RANGE	DEFAULT SETTING	SECTION
Commission Location Entry	Commission Loc	Set the install location of the system. 14 Characters Max.	A-Z, 0-9 -. /		3.4.5
Reset to Factory Defaults	Restore Factory Defaults?	Restore all settings to the factory default	Yes/No	No	3.5.7

Control Setup (MENU 5)

This menu contains various optional Process Control settings. It cannot be accessed while the PF2100 is running.

MENU MAP	ON SCREEN	BRIEF DESCRIPTION	RANGE	DEFAULT SETTING	SECTION
High Temp ESD Setpoint	High Temp ESD Setpoint	Adjusts the High Temperature shut-down setpoint	2 to 1350°C (36 to 2462°F)	90°C (194°F)	3.4.10
Process Control Input	Process Control	Configure the thermocouple used as the Process Temperature	Process TC, AUX TC	Process TC	3.4.9
Low Fire Enable	Low Fire	Enables Low Fire feature and setpoint	Disabled, on at Proc Setpnt, on at Low Fire Setpnt	Disabled	3.4.9
Low to High Fire Delay	Low to High Fire Delay	Adjusts the time from Low Fire Valve opening to High Fire Valve opening, when Low Fire is enabled	30- 600 sec	Hidden, 30 sec	3.4.13
Pilot Off Enable	Pilot Off	Enables Pilot Off feature and setpoint	Disabled, Enabled	Enabled	3.4.9

Control Setup (MENU 5) Continued...

MENU MAP	ON SCREEN	BRIEF DESCRIPTION	RANGE	DEFAULT SETTING	SECTION
Aux Temp Mode	AUX Temp Mode	Configures how the Auxiliary Thermo-couple is used.	Disabled, Display Only, Temp Main Ctl, Temp ESD	Disabled	3.4.9
4-20 Output Mode	4-20 Out Mode	Configures 4-20 Output mode	Valve Control, Temperature Out	Valve Control	3.4.2
4-20 Low Fire Setting	4-20 Out Lo Fire Setting	Sets the minimum output for the 4-20mA Output when used for Valve Control.	0 to 60%	40%	3.4.2
4-20 Gain Setting	4-20 Out Cntrl Gain	Sets the adjustment speed of the control loop for the 4-20mA Output when used for Valve Control.	0.1 to 1%/s	0.5%/s	3.4.2

Expansion Cards (MENU 6)

This menu contains settings relating to expansion cards.

MENU MAP	ON SCREEN	BRIEF DESCRIPTION	RANGE	DEFAULT SETTING	MORE INFO
4-20 Input Card Enable	4-20 Input Card Enabled	Enable the 4-20mA Expansion Card and setpoints	No/Yes	No	3.4.1
4-20 Level Low Setpoint	4-20 LVL Low Setpnt	Adjusts 4-20 Low Level trip point	0-Max Volume	Hidden, 60m3	3.4.1
4-20 Level High Setpoint	4-20 LVL High Setpnt	Adjusts 4-20 High Level trip point	0-Max Volume	Hidden, 117m3	3.4.1
4-20 Level Range	4-20 LVL Range	Adjusts Max Level of the tank	0-10000	Hidden, 120m3	3.4.1

Expansion Cards (MENU 6) Continued...

MENU MAP	ON SCREEN	BRIEF DESCRIPTION	RANGE	DEFAULT SETTING	MORE INFO
4-20 Level Units	4-20 LVL Units	Adjusts the display units for the 4-20mA Level Input	%, m3, BBL, GAL,L	Hidden, m3	3.4.1
4-20 Pressure Low Setpoint	4-20 PRS Low Setpnt	Adjusts 4-20 Low Pressure trip point	0-High Setpoint	Hidden, 3.0 PSI	3.4.1
4-20 Pressure High Setpoint	4-20 PRS High Setpnt	Adjusts 4-20 High Pressure trip point	Low set-point – Max Pressure	Hidden, 25.0 PSI	3.4.1
4-20 Pressure Range	4-20 PRS Range	Adjusts Max pressure of the fuel train	0-2000	Hidden, 30.0 PSI	3.4.1
4-20 Pressure Units	4-20 PRS Units	Adjusts the display units for the 4-20mA Pressure Input	PSI, kPa, inWC, cmWC, ksc	Hidden, PSI	3.4.1
Enable control and address for the Modbus Module	Modbus Card	Enable control and address for the Modbus Expansion Card	Disabled, 1-128	Disabled	3.4.7
4-20 Card FW Version	4-20 FW	Display Expansion Card FW Version	N/A	N/A	3.4.1, 3.5.6
MODBUS Card FW Version	MBUS FW	Display Expansion Card FW Version	N/A	N/A	3.4.7, 3.5.6

This section of the manual is designed to aid you in troubleshooting the PF2100. It begins with a list of Common Issues and Solutions. Following this are reference tables containing Shutdown Messages, Alarm Codes, and Warning Messages. This section concludes with a pair of step-by-step guides for troubleshooting issues with Flame Detection and thermocouples.

If you are having trouble with your PF2100 System, please consult the following resources in this order:

- Consult this section for solutions to see if one matches your needs.
- Consult the support section of our website at **www.profireenergy.com.**
- Contact us on our support line at **1-855-PRO-FIRE** (776-3473).

Common Issues & Solutions

The following list of issues is organized alphabetically by topic. Under each issue is a list of possible solutions.

EXPANSION CARDS

1. Cannot Write Setpoints via Modbus

a. Check that the system has the latest firmware. Firmware older than v1.8.005 did not support this feature.

b. Check that the Modbus Card has the latest firmware. Firmware older than v4.0 did not support this feature.

FLAME DETECTION

1. System Has Visible Flame But Cannot Detect It

a. The flame rod, pilot assembly and the gap between them should be fully engulfed in flame. If not, adjust the rod positioning.

b. Check that the flame detection wiring does not exceed the recommended maximum length.

c. Check that the Ion+ wire is securely connected as per the appropriate wiring diagram.

d. Check that the ground connection between the PF2100 and the pilot assembly is present and secure.

e. Put the PF2100 into Manual Mode and use the Review Menu to check the flame quality level.

f. Consult the instructions in the section 5.5 (Flame Detection Troubleshooting Guide) for further details on Flame Detection.

SHUTDOWN

1. System shuts down with a High/Low Voltage message shutdown
    a. Ensure that the system voltage setting is set to match the power supply's nominal voltage.
    b. Check that the system has the latest firmware. Firmware older than v1.8.005 was prone to shutdown on transient voltage spikes and dips.
    c. Ensure that some other load is not causing the supply to droop periodically. This can be done by simply removing other devices from the supply or if that is not an option, monitor the supply voltage with a data logger.
    d. Ensure that the power supply is rated appropriately for the valves and other peripheral devices attached to the PF2100. Refer section 2.6.1 (Power) for details.
2. System shuts down on High Temperature ESD
    a. Check that the HT ESD setpoint is not set too close to the operating temperature of the system. Measurement accuracy and process control overshoot can cause the system to shutdown if they are too close.
3. System shuts down on an Open TC Error
    a. Check if one of the thermocouples is not connected inside of the PF2100. Note that both the Process and High Temp thermocouples are required.
    b. Check that there are no breaks in the thermocouple wiring.

SOLAR POWER

1. Solar output voltage is 12V when 24V is expected
    a. Check if the solar panels are incorrectly wired in parallel rather than series
2. Expected battery life is not achieved
    a. The PF2100 is not setup to use low power valves with a PWM setting of 20%
    b. The PF2100 is not setup to put the display to sleep when not being used
    c. The solar panel is undersized
    d. The solar panel is shaded or not located in full sun
3. The battery is not being charged at all
    a. Check if the Solar Charger is damaged or defective. Look for flashing error codes on the controller's LEDs.
    b. The solar panel is undersized
    c. The solar panel is shaded or not located in full sun
    d. The battery is defective

SOLENOIDS

1. Valves are not opening
    a. Check if the positive and negative wires are reversed.
    b. Ensure that each valve has a separate negative return wire connected to the correct terminal. A common ground wire

cannot be used and will not work.

c. Check if the proper PWM setting is used for each valve.

d. Check if the valve voltage ratings match the system voltage (12V or 24V).

2. System shuts down with terminal card command refused, master power, solenoid feedback.

a. Check solenoid wiring to ensure that no wires are crossed and separate return wires are used for each valve.

STATUS CONTACT

1. Status Contact Opens But System Continues to Run

a. Check that the system has the latest firmware. Some firmware versions older than v1.8.005 had a bug that might lead to this under certain circumstances. If you can't update your firmware immediately, repositioning the flame rod so that it is more fully immersed in the flame can lessen the occurrence of this issue.

2. Status Contact Never Closes

a. The current or voltage ratings on the status contact may have been exceeded. Verify that you are not exceeding these ratings. If the ratings were exceeded, check the terminal Card HW version to determine the appropriate solution.

i. v1.6: Replace the Terminal Card.
ii. v1.7: Replace the Status Contact Fuse on the Terminal Card.

THERMOCOUPLES

1. Thermocouple Readings are Bouncing

a. Verify that the Valve PWM Settings are correct for the valves that are being used. Using incorrect settings for a valve can result in more noise than necessary. The lowest noise will result when the PWM setting is set to 20% for low power valves and 100% for regular valves.

b. Verify that proper system grounding is being observed. Especially check that all solenoids are properly connected to earth ground.

2. Thermocouple Readings are Incorrect

a. Check if the thermocouple wiring polarity is reversed. Yellow should be connected to positive, and red to negative.

b. Check that no thermocouple pairs are crossed (ie, positive from one TC paired with negative from another TC).

c. Ensure that only type-k thermocouple wire and connectors are used. Even small sections of other types of wire can significantly disrupt the measurement.

d. If a head connection is used, verify that none of the above wiring issues exist there either.

e. Check if the thermocouple is defective by trying a different thermocouple that is known to be good or by connecting the suspect thermocouple to a process calibrator.

f. Check that the PF2100 is in proper calibration using a process calibrator. If not, recalibrate the system.

Shutdown Messages

The following is a list of messages that may flash on the PF2100 display after the system has shutdown. Typically, the word "SHUTDOWN" in large text will flash alternately with one of the messages below. These messages indicate the reason that the system last shutdown and can be cleared by pressing the OK key (except where noted). Use the table below to determine the meaning of these messages. This table is organized alphabetically.

ON SCREEN	DESCRIPTION
Ambient Temps Not Equal	The Ambient Temperature read by the Door Card does not match the one reported by the Terminal Card.
Aux High Temp	Aux Temp Mode is set to "Temp ESD" and the Auxiliary Temperature exceeded the High Temp ESD Setpoint.
Aux Thermocouple Error	The Auxiliary Thermocouple is open or shorted.
Comparison Setpoints	One of the Setpoints in the Door Card does not match the corresponding value in the Terminal Card.
ESD Input	The ESD Input was open while the system was running or attempting to start.
Expansion Card Error / 4-20 Exp Card: 4-20 Level Low	The 4-20mA Level Input was below the Level Low Setpoint while the system was running with the Level Event Restart feature disabled.
Expansion Card Error / 4-20 Exp Card: 4-20 Level Open	The 4-20mA Level Input is open (reading below ~ 3.75mA)
Expansion Card Error / 4-20 Exp Card: 4-20 PRS High	The 4-20mA Pressure Input was above the Pressure High Setpoint while the system was running with the Main Valve open.
Expansion Card Error / 4-20 Exp Card: 4-20 PRS Low	The 4-20mA Pressure Input was below the Pressure Low Setpoint while the system was running with the Auto Restart feature disabled.
Expansion Card Error / 4-20 Exp Card: 4-20 PRS Open	The 4-20mA Pressure Input is open (reading below ~ 3.75mA)
Expansion Card Error / 4-20 Exp Card: Card Fail	The 4-20mA Expansion Card is not responding. This may indicate that it is not installed correctly or that it is enabled when not present at all.
Expansion Card Error / Modbus Card: Card Fail	The Modbus Expansion Card is not responding. This may indicate that it is not installed correctly or that it is enabled when not present at all.
Flame detected before start	Flame was detected prior to the system igniting the pilot. This may indicate a leaky valve, inadequate purge time, or a faulty Terminal Card.

Shutdown Messages Continued...

ON SCREEN	DESCRIPTION
Flame Fail	The system failed to ignite the pilot within the allocated number of retry attempts.
Flame Rod Test Error / Adjust Flame Rod Position	The Flame Rod or associated wiring may be shorted to ground thus preventing it from properly detecting flame.
High Pressure	The High Pressure Contact remained open for more than 2s after the main valve opened. This error can also be triggered by the 4-20 Input Card if the Pressure reading remains above the 4-20 Pressure High Setpoint for 2s after the main valve opened.
High Temp	The Process Temperature rose above the High Temp ESD Setpoint.
High Temp Setpnt Mismatch	The Door Card and Terminal Card do not agree on the value of the High Temp ESD Setpoint.
High Voltage xx.x Volts	The system voltage remained above the High Voltage Alarm point for 20s or more and Auto Restart is disabled. "xx.x" is the voltage reading at the point in time when the shutdown occurred. See section 3.4.12 (System Voltage) for a description of these alarm points.
HT Thermocouple Error	The High Temp Thermocouple is open or shorted.
Ignite Key Stuck	The Ignite Key was held for more than 30s while in manual mode.
KEY STUCK ERROR	Key Stuck at System Startup. This may indicate a defective keypad. This error must be resolved in order to continue using the system.
Level Input	The Level Contact is open and "Level Event Restart" is set to "Off". This error can also be triggered by the 4-20 Input Card if the Level reading is below the 4-20 Level Low Setpoint and "Level Event Restart" is set to "Off".
Low Pressure	The Low Pressure Contact is open and "Auto Restart" is set to "Off". This error can also be triggered by the 4-20 Input Card if the Pressure reading is below the 4-20 Pressure Low Setpoint and "Auto Restart" is set to "Off".
Low Voltage xx.x Volts	The system voltage remained below the Low Voltage Alarm point for 20s or more and "Auto Restart" is set to "Off". "xx.x" is the voltage reading at the point in time when the shutdown occurred. See section 3.4.12 (System Voltage) for a description of these alarm points.
Master Power Error	The Master Power switch to the powered valve outputs was in the wrong state. This may indicate a Terminal Cards hardware failure.

Shutdown Messages Continued...

ON SCREEN	DESCRIPTION
Modbus Card: Shutdown	The system shut down because a remote shutdown command was recieved via Modbus.
Modbus Card: Shutdown / Remote Cmd Error	The system recieved an undefined command from the Modbus Expansion Card.
Pilot Key Stuck	The Pilot Key was held for more than 30s while in manual mode.
Pro Thermocouple Error	The Process Thermocouple is open or shorted.
Proof of Closure / Should be Closed	The Proof of Closure Contact was detected to be Open when it was not expected to be. This may indicate a faulty valve or wiring.
Purge Values Mismatch	The Door Card and Terminal Card do not agree on the value of the Purge Time Setting.
Solenoid Feedback Error / Check Solenoid Wiring	The solenoids were observed to have a state opposite to the one being driven by the PF2100. Check that the wiring is correct and not shorted to power or ground.
System Error	Illegal Process Control or Display State
Terminal Card Command Refused	The Terminal Card recieved a valid command from the Door Card but the command was refused because it would result in an invalid or unsafe state. The Door Card failed to detect this.
Terminal Card Communication	The Termincal Card is not communicating with the Door Card. This may indicate a faulty ribbon cable or incompatible firmware. The Door Card failed to detect this.
Terminal Card High TC Grounded	The Terminal Card detected that the High Temp Thermocouple was shorted to ground. The Door Card failed to detect this.
Thermocouples Not Equal / Check Wiring	The High Temp and Process Thermocouples are reading temperatures that are too far apart. This may indicate a failed thermocouple or improper wiring.
User Stop	The user pressed the Stop key on the keypad.

Alarm Codes

The following is a list of alarm codes that may show on the Alarm screen of the PF2100 display. These codes indicate a persistent problem that must be cleared before the system can be restarted. Use the table below to determine the meaning of these codes.

ON SCREEN	DESCRIPTION
4-20Lvl	The 4-20 Input Card's Level Input is reading a value below the 4-20 Level Low Setpoint and "Level Event Restart" is set to "Off".
4-20Prs	The 4-20 Input Card's Pressure Input is reading a value below the 4-20 Pressure Low Setpoint and "Auto Restart" is set to "Off".
AuxTC	The system is in a mode that requires the Aux Thermocouple and the Aux Thermocouple is open or otherwise wired incorrectly.
DC_TC	The TC430 temperature sensor on the Door Card is not responding.
ESD_Inp	The ESD Contact is Open.
FlmTest	There is a problem with the Flame Detection wiring or circuitry.
PoC_Inp	The Proof of Closure contact is open.
HiVolt	The system voltage is above the High Voltage Alarm point.
HT_ESD	The Process Temperature is above the High Temp ESD Setpoint.
HT_TC	The High Temp Thermocouple is open or otherwise wired incorrectly.
LoVolt	The system voltage is below the Low Voltage Alarm point.
LowPrs	The Low Pressure Contact is Open or the 4-20mA Expansion Card's Pressure Input is reading a value below the 4-20 Pressure Low Setpoint. In either case, "Auto Restart" is set to "Off".
Lvl_Inp	The Low Level Contact is Open or the 4-20mA Expansion Card's Level Input is reading a value below the 4-20 Level Low Setpoint. In either case, "Level Event Restart" is set to "Off".
MbusErr	The Modbus Card is not responding. This may indicate that it is not installed correctly or that it is enabled when not present at all.

Alarm Codes Continued...

ON SCREEN	DESCRIPTION
ProcTC	The Process Thermocouple is open or otherwise wired incorrectly.
RemShut	Modbus Shutdown Command Received
Sys_Err	System Error – The Terminal Card is not communicating with the Door Card. This may indicate a faulty ribbon cable or incompatible firmware.
TC_MM	The High Temp and Process Thermocouples are reading temperatures that are too far apart. This may indicate a failed thermocouple, improper wiring, or a damaged Door or Terminal Card.
Val_MM	The Door and Terminal Card's setpoints do not match.

Warning Messages

The following is a list of warning messages that may flash periodically on the PF2100 display. These messages indicate a problem that may be developing or a condition from which the system may automatically restart once cleared. Use the table below to determine the meaning of these messages.

ON SCREEN	DESCRIPTION
Check all settings / Other settings have changed	A major process control setting was changed and the process control setpoints were reset to factory defaults. This includes the High Temp ESD Setpoint, the Pilot Off Setpoint, the Low Fire Setpoint, the Process Setpoint, the Low Temp Alarm Setpoint, the Deadband setting, and the Aux Setpoint.
HI Volt Warning	The system voltage is getting close to the High Voltage Alarm threshold and may stop or shutdown soon.
High Prs Warning	The High Pressure Contact was open on system start and must be closed soon or the system will shutdown.
LO Volt Warning	The system voltage is getting close to the Low Voltage Alarm threshold and may stop or shutdown soon.
Low Temp Alarm	The process temperature is below the Low Temp Alarm Setpoint and the Status Contact is Open.
Unit restarted from LVL event	The system has recently restarted from a Level event. Press OK to clear this message.

Warning Messages Continued...

ON SCREEN	DESCRIPTION
Unit restarted from PRS event	The system has recently restarted from a Low Pressure event. Press OK to clear this message.
Unit restarted from VLT event	The system has recently restarted from a Low or High Voltage event. Press OK to clear this message.
Waiting: 420 LVL	The system will automatically restart once the 4-20 Input Card's Level Input rises above the Low Setpoint.
Waiting: 420 PRS	The system will automatically restart once the 4-20 Input Card's Pressure Input drops below the High Set-point.
Waiting: HiVolt	The system will automatically restart once the system voltage falls below the High Voltage Alarm Threshold.
Waiting: LoVolt	The system will automatically restart once the system voltage rises above the Low Voltage Alarm Threshold.
Waiting: Low PRS	The system will automatically restart once the Low Pressure Contact is closed.
Waiting: LVL	The system will automatically restart once the Level Contact is closed.
Waiting:STRT Int	The system will automatically restart once the Start Contact is closed.

Flame Detection Troubleshooting Guide

System is not detecting flame.

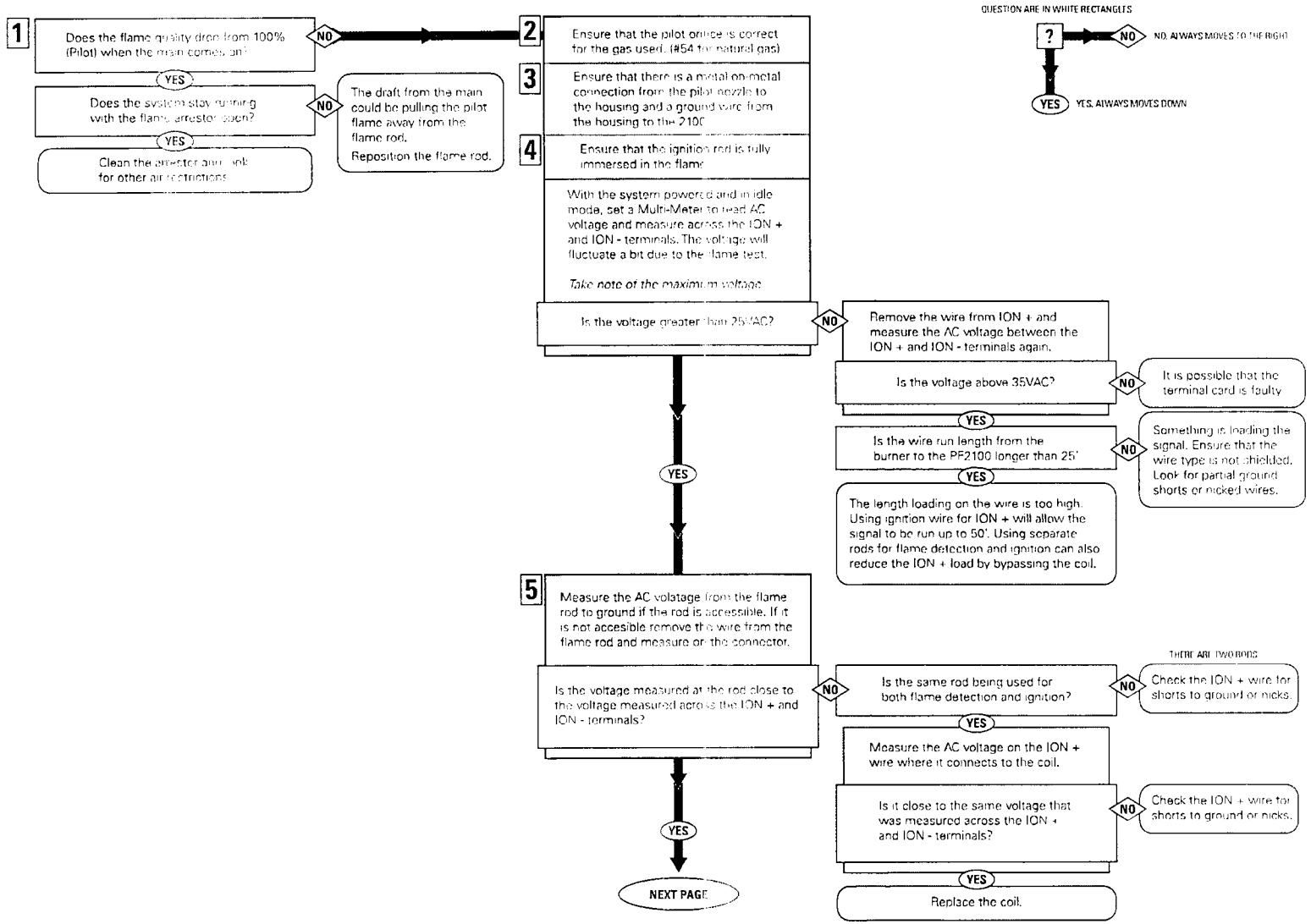

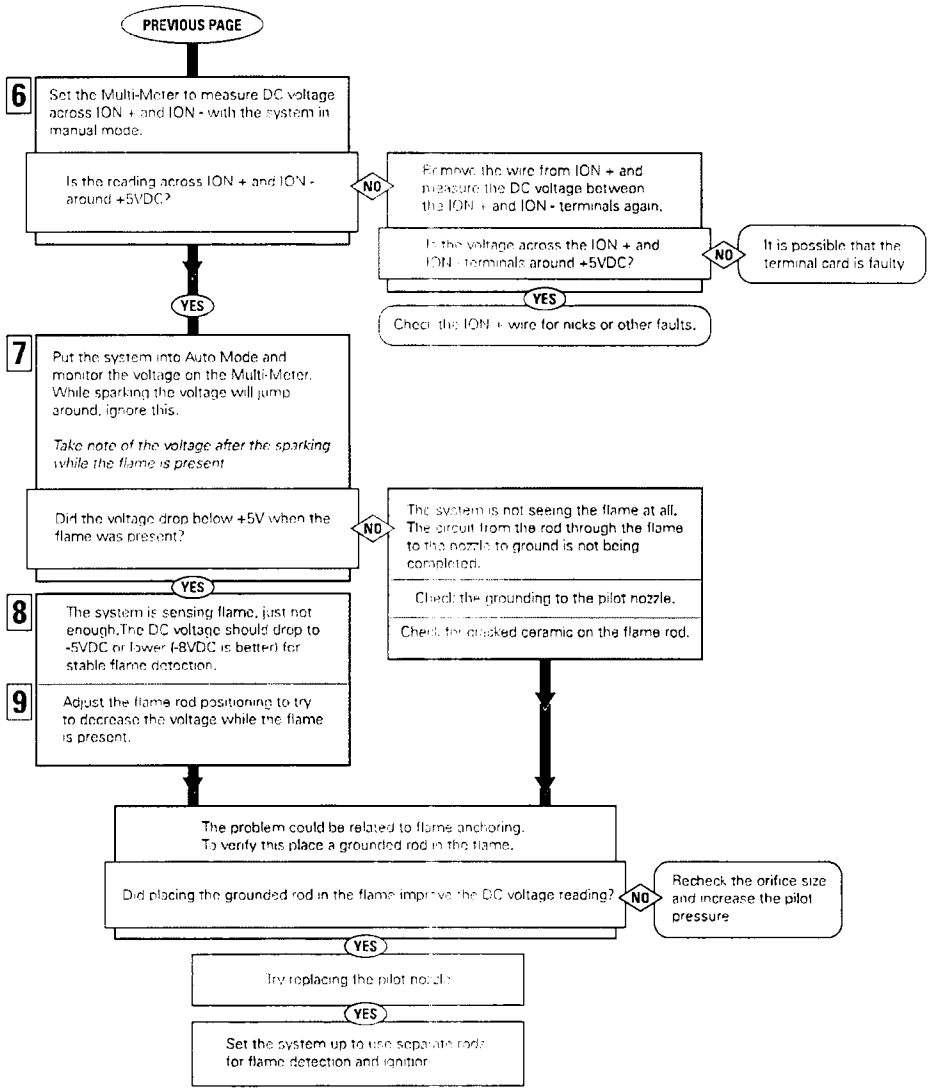
PREVIOUS PAGE
6
Set the Multi-Meter to measure DC voltage across ION + and ION - with the system in manual mode.
Is the reading across ION + and ION - around +5VDC?
NO
Remove the wire from ION + and measure the DC voltage between the ION + and ION - terminals again.
Is the voltage across the ION + and ION - terminals around +5VDC?
NO
It is possible that the terminal card is faulty
YES
Check the ION + wire for nicks or other faults.
YES
7
Put the system into Auto Mode and monitor the voltage on the Multi-Meter. While sparking the voltage will jump around, ignore this.
Take note of the voltage after the sparking while the flame is present
Did the voltage drop below +5V when the flame was present?
NO
The system is not seeing the flame at all. The circuit from the rod through the flame to the nozzle to ground is not being completed.
Check the grounding to the pilot nozzle.
Check for cracked ceramic on the flame rod.
YES
8
The system is sensing flame, just not enough.The DC voltage should drop to -5VDC or lower (-8VDC is better) for stable flame detection.
9
Adjust the flame rod positioning to try to decrease the voltage while the flame is present.
The problem could be related to flame anchoring. To verify this place a grounded rod in the flame.
Did placing the grounded rod in the flame improve the DC voltage reading?
NO
Recheck the orifice size and increase the pilot pressure
YES
Try replacing the pilot nozzle
YES
Set the system up to use separate rods for flame detection and ignition

Thermocouple Troubleshooting Guide

Problem with Thermocouples.

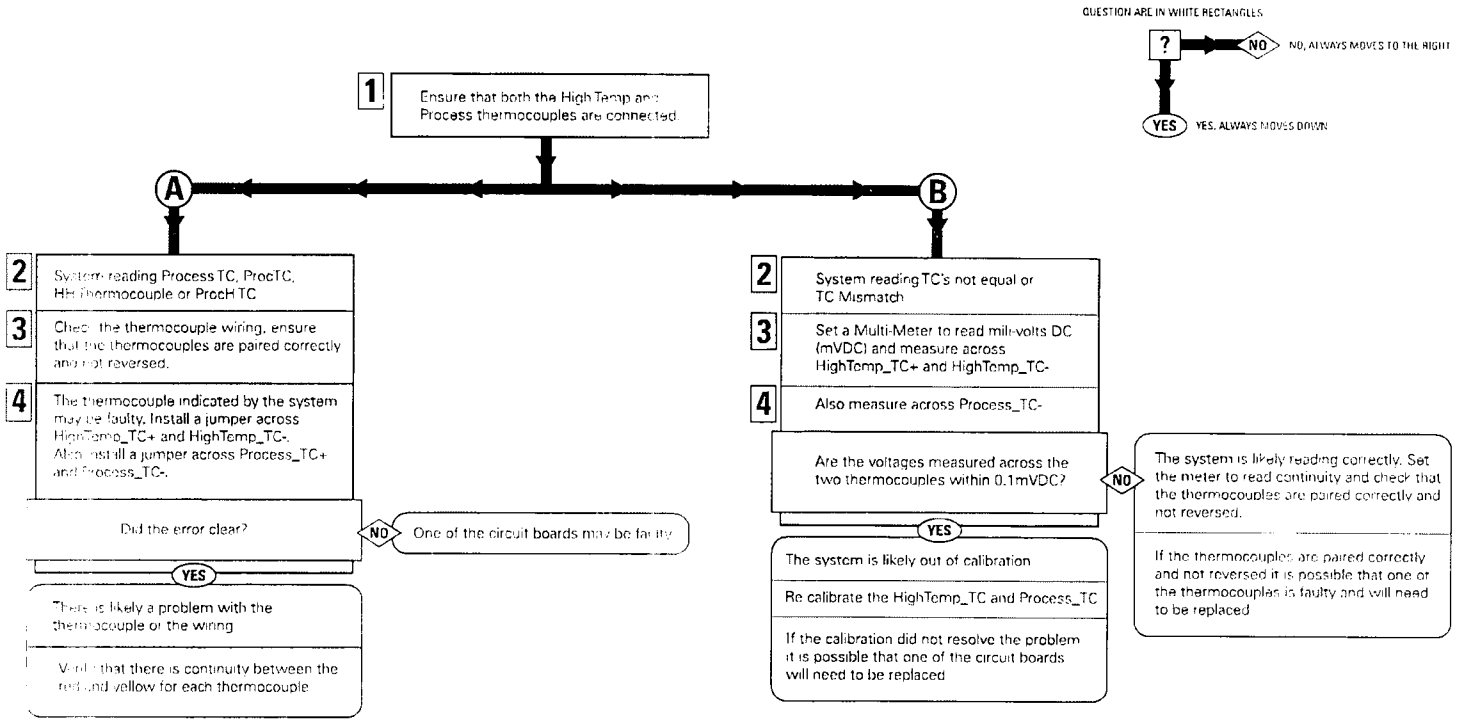

GENERAL FEATURES

- Designed for use with natural draft fire tube heaters
- Meets or exceeds all relevant codes and standards
- Easy installation with clearly marked component I/O
- Easily accessible removable terminal connections
- Rapid 3 second shut-down on flame-out
- Electronic spark ignition
- Low-power operating mode to accommodate solar panel or TEG applications
- Auto-relight or manual operation
- Transient protected and fail-safe circuits

INPUTS & OUTPUTS

(6) Digital inputs for safety interlock device connections
(5) Digital outputs
(1) 4-20mA output
(1) Flame-rod input
(3) Thermocouple inputs
Refer to section 2.6.3(Thermocouples) for more details

CIRCUT BOARDS

All solid state
CSA compliant for Class 1, Division 2 locations
Certified for use on B.149 compliant valve trains

IGNITION BASE AND COIL

For non-hazardous mounting area only
Ignition coil mounted in the PF2100 is optionally available.

TECHNICAL SPECIFICATIONS

TEMPERATURE RATINGS	MIN	MAX
Operating Range	-40°C (-40°F)	+55°C (+130°F)
Storage Range	-40°C (-40°F)	+80°C (176°F)
POWER CONSUMPTION	**12V**	**24V**
Controller only, display ON	2.6 W	2.9 W
Controller only, display OFF	1.1 W	1.2 W
Maximum Total Current Draw	5A	5A
Maximum Valve Current Draw	2A	2A
Ignition Voltage (Internal Coil)	up to 20 kV	up to 40 kV
TERMINAL BLOCKS	**VALUE**	
Maximum Wire Gauge	12 AWG	
STATUS CONTACT	**VALUE**	
Type	Dry	
MAX Voltage	125VDC	
MAX Continuous Current	250mA	
Impedance (When Closed)	15Ω	
PHYSICAL DIMENSIONS	**VALUE**	
Width	30.9 cm (12.15 in)	
Height	23.4 cm (9.23 in)	
Depth	13.4 cm (5.28 in)	
WEIGHT	**VALUE**	
E0000 Model	4.0lbs / 1.8kg	
E0400 Model	4.5lbs / 2.0kg	
E0M00 Model	4.5lbs / 2.0kg	
EC000 Model	6.0lbs / 2.6kg	
FUSES	**VALUE**	
Main Fuse Rating	5A / 250V Ceramic, Fast Blow	
Status Contact Fuse Rating	250mA / 125V Ceramic, Fast Blow	
Replacement Main Fuse	LittelFuse 0314005.HXP	
Replacement Status Contact Fuse	LittelFuse 0453.250	



www.profireenergy.com

© 2013 PROFIRE

APPLICATIONS:

For discharge of liquid or gas from vessels, separators, treaters, knockouts and other similar liquid accumulators.

For back pressure or pressure reducing applications with pressure pilots.

FEATURES:

Compact design
O Ring sealed seat
Valve travel indicator
Field reversible topworks
Teflon packed stuffing box

TOPWORKS:

Standard topworks have an effective diaphragm area of approximately 30 square inches for 1" and 65 square inches for 2" control valves.

Unless otherwise specified, all HPCV's will be furnished with ductile topworks, steel topworks available. Specify when ordering.

SPRINGS:

The 1" HPCV springs are available for diaphragm pressures of 10, 20, and 30 psig.

The 2" HPCV springs are available for diaphragm pressures of 15, 20, and 30 psig.

Unless otherwise specified, all 1" HPCV's with 1/2" INNER VALVES get 30 psig spring others get 20 psig. spring, all 2" HPCV's will be furnished with springs as follows 2000 psig. W.P. valves, 20 lb. springs and 4000 psig. W.P. valves, 30 lb. springs.

Top Adjusting Screw may be adjusted to vary the spring tension slightly; this affects pressure required to actuate valve.

CAPACITIES:

Refer to the Table of Contents

STEM TRAVEL:

1" HPCV - 1/2" maximum
2" HPCV - 3/4" maximum

ACTUATOR WORKING PRESSURE:

10-30 psig normal (see spring ranges)
45 psig maximum

WORKING PRESSURE:

1" HPCV - 4000 psig
2" HPCV - 2000 & 4000 psig

TEMPERATURE RANGE:

-20° to 500°F

INNER VALVE SPECIFICATIONS:

The 1" HPCV standard valve plugs consists of a carbide ball rigidly connected to a 303 stainless steel stem. Standard seats are made of heat treated tool steel.

The 2" HPCV standard valve plugs for 1/2" and smaller consist of a carbide ball rigidly connected to a 303 stainless steel stem. Standard valve plugs for 3/4" and 1" consist of a hardened high chrome alloy ball rigidly connected to a 303 stainless steel stem. Standard seats are made of heat treated tool steel.

Inner valves can be made from a wide selection of materials. Specify when ordering.

1" Cf & Cv VALUES					2" Cf & Cv VALUES				
Line Size	Trim Type	Trim Size	Cf	Cv	Line Size	Trim Type	Trim Size	Cf	Cv
1"	Carbide	1/8"	0.73	0.45	2"	Carbide	1/4"	0.65	2.10
		3/16"	0.74	1.00			3/8"	0.76	4.07
		1/4"	0.68	1.93			1/2"	0.80	7.20
		3/8"	0.74	3.86			3/4"	0.78	13.11
		1/2"	0.90	5.70			1"	0.70	19.90
	Nominal	1/8"	0.58	1.06		Nominal	1/4"	0.55	2.96
		3/16"	0.59	1.51			3/8"	0.77	4.04
		1/4"	0.78	2.17			1/2"	0.78	7.20
		3/8"	0.91	3.22			3/4"	0.80	12.20
		1/2"	0.94	5.72			1"	0.77	21.25
	Equal Percentage	1/8"	0.73	0.34		Equal Percentage	1/4"	0.65	2.12
		1/4"	0.66	1.99			7/16"	0.60	5.44
		1/2"	0.78	6.49			5/8"	0.58	10.76
		15/16"	0.65	12.00			7/8"	0.66	17.40

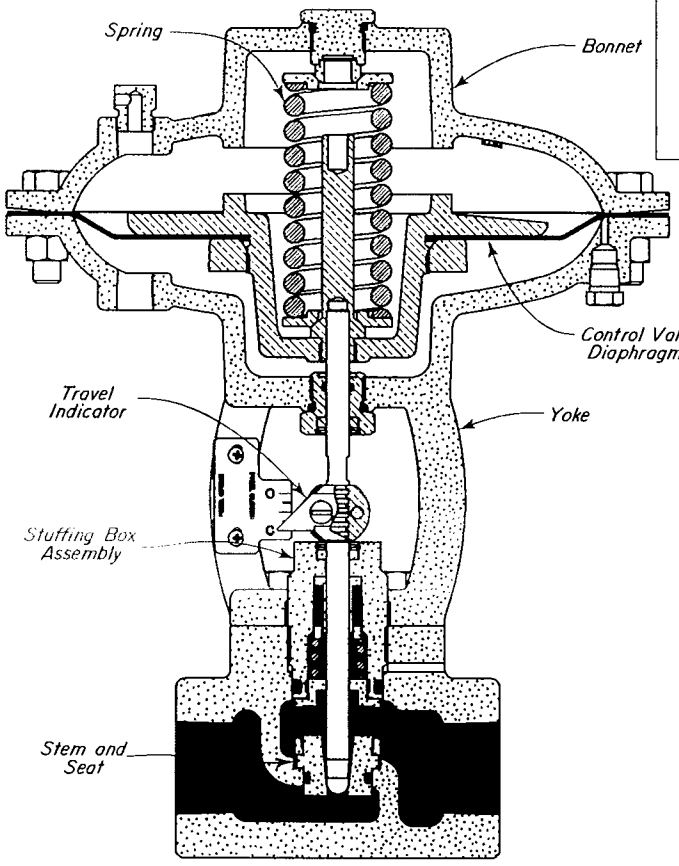

Control Valve Diaphragm Assembly
Control Valve Diaphragm Pressure
Upstream Pressure
Downstream Pressure

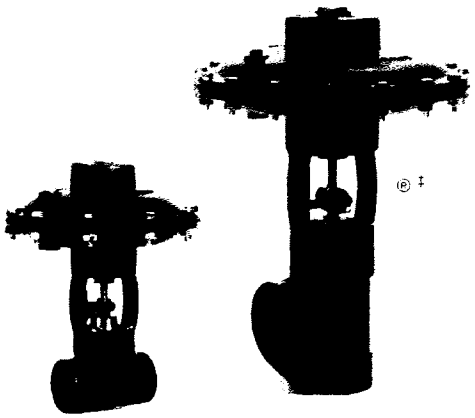

Kimray is an ISO 9001- certified manufacturer.

KIMRAY INC.®

1 HPCV
STEEL BODY DUCTILE TOPWORKS

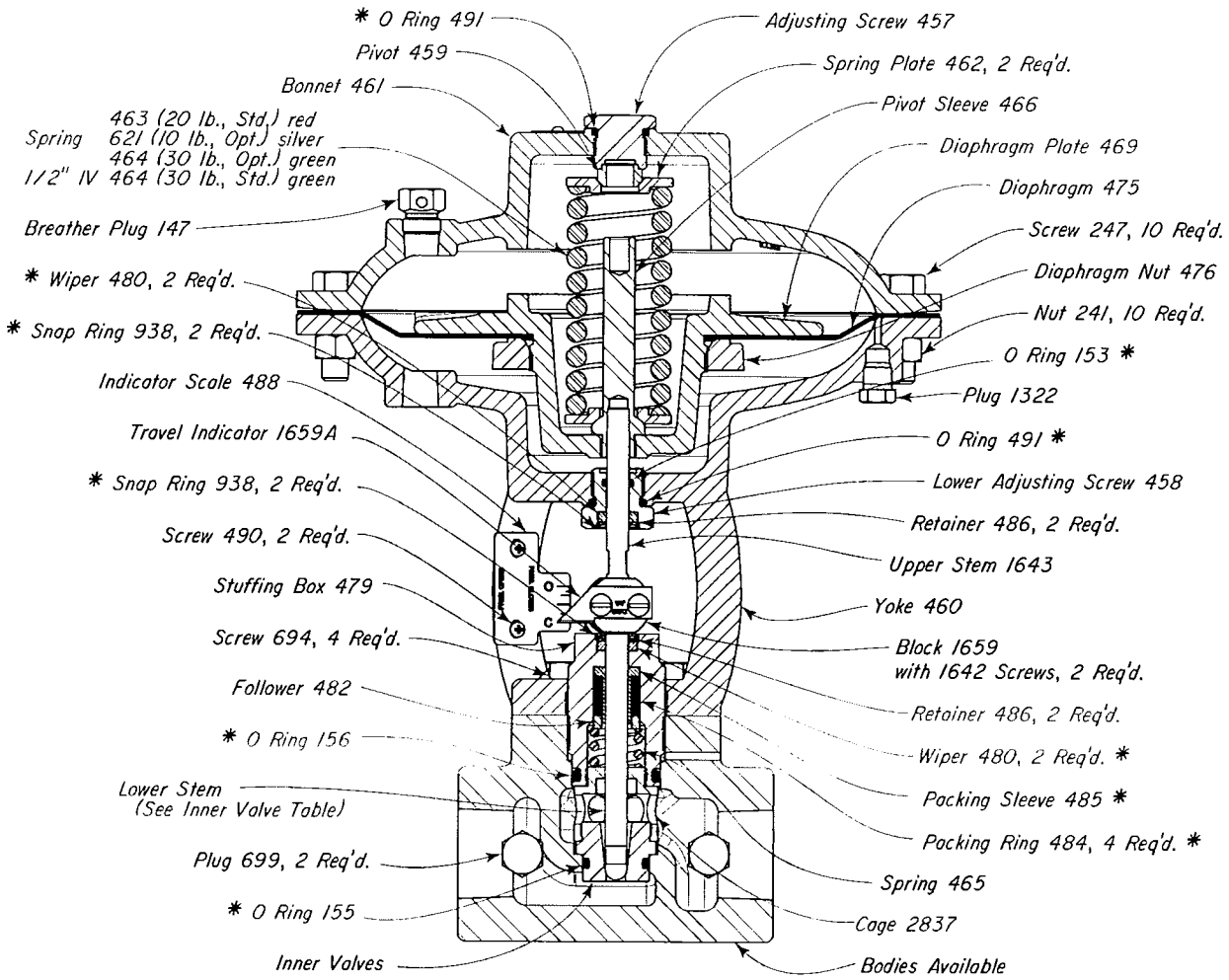

SEAT SIZE	LINEAR FLOW SEATS D-2 TOOL STEEL TRIM SET NO.
1/8"	T2842
3/16"	T2841
1/4"	T2840
3/8"	T2838
1/2"	T2839

Seat Removal Tool 3032
(Available at extra cost)

BODY TYPE	SCREWED		FLANGED THRU		FLANGED ANGLE	
	BODY	W.P.	BODY	ANSI CLASS	BODY	ANSI CLASS
THRU	452	4000 psig	2374RF	150 RF	2772RF	150 RF
ANGLE	453	4000 psig	2769RTJ	150 RTJ	2776RTJ	150 RTJ
Δ 2" NPT ANSI THREADS			5335RF	300 RF	2773RF	300 RF
			2770RTJ	300 RTJ	2777RTJ	300 RTJ
			1945RF	600 RF	2133RF	600 RF
			2054RTJ	600 RTJ	2778RTJ	600 RTJ
			2768RF	1500 RF		
			2771RTJ	1500 RTJ	2780RTJ	1500 RTJ

THRU VALVES AVAILABLE:

CAT. NO.	INNER VALVE	VALVE	MAX W.P.	KIT
EAE	1/8"	1400 SMT PO 1/8 IV	4000	RFA
EAF	3/16"	1400 SMT PO 3/16 IV	4000	RFA
EAG	1/4"	1400 SMT PO 1/4 IV	4000	RFA
EAH	3/8"	1400 SMT PO 3/8 IV	4000	RFA
EAI	1/2"	1400 SMT PO 1/2 IV	4000	RFA

NOTE: All standard HPCV's have a Cat No. Seats, stems, cages, stuffing boxes and valve bodies are available in 316 stainless steel. Inner valves can be made from a wide selection of materials. Specify when ordering.

ANGLE VALVES AVAILABLE:

CAT. NO.	INNER VALVE	VALVE	MAX W.P.	KIT
EAA	1/4"	1400 SMA PO 1/4 IV	4000	RFA
EAB	3/8"	1400 SMA PO 3/8 IV	4000	RFA
EAC	1/2"	1400 SMA PO 1/2 IV	4000	RFA

For dimensions refer to Table of Contents. Flanged dimensions available on request.

*These are recommended spare parts and are stocked as repair kits.

Snap and Equal Percentage trim sets avaliable see page E1:90.1

For more code options see Product Bulletin PB0002

Kimray is an ISO 9001- certified manufacturer.

CONVERSION INSTRUCTIONS

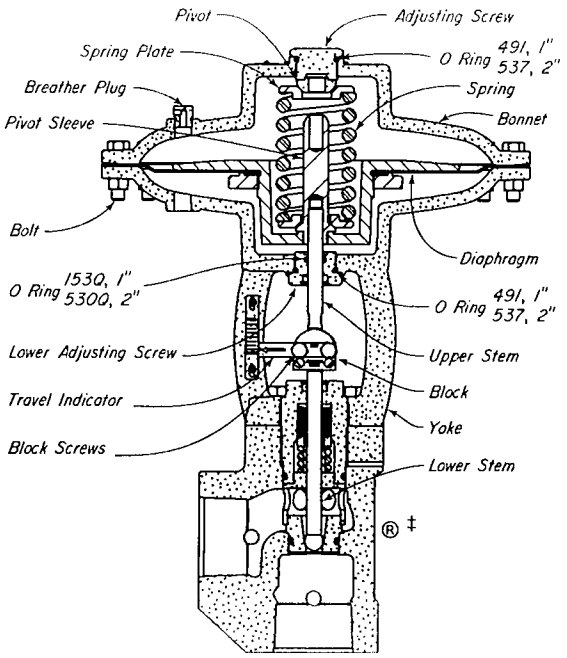

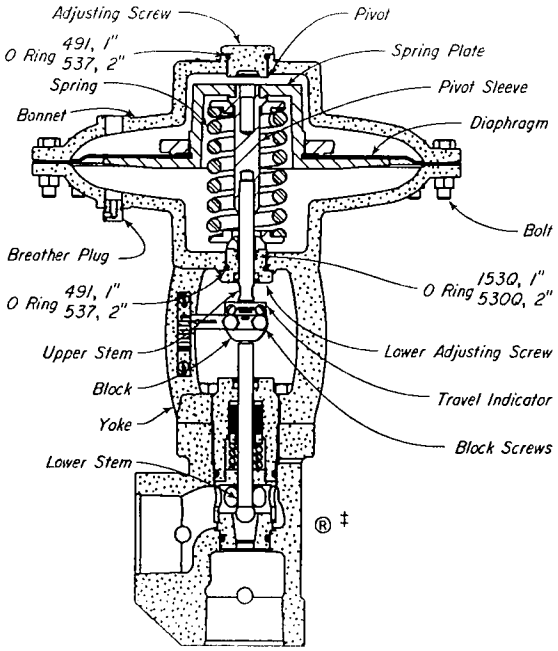

PRESSURE CLOSING to PRESSURE OPENING:

Remove BLOCK SCREWS, TRAVEL INDICATOR and COUPLING BLOCK. Remove UPPER ADJUSTING SCREW, BOLTS, and BONNET. Lift out Diaphragm Assembly (Crosshatched). Remove SPRING, SPRING PLATES and PIVOT. Unscrew UPPER STEM and insert in opposite end of PIVOT SLEEVE.

Invert Diaphragm Assembly and replace. Care should be taken when threading the UPPER STEM through the LOWER ADJUSTING SCREW so as not to damage O RING, 153Q - 1", 530Q -2". Replace SPRING with a SPRING PLATE in each end. UPPER ADJUSTING SCREW opening Thread UPPER ADJUSTING SCREW into BONNET until contact is made with the PIVOT, then tighten two turns. The UPPER ADJUSTING SCREW now becomes the SPRING adjustment. With BLOCK SCREWS through INDICATOR, replace COUPLING BLOCK matching match marks. Move BREATHER PLUG to BONNET (upper Diaphragm Housing). Connect Diaphragm Pressure from PILOT to YOKE (Lower Diaphragm Housing).

PRESSURE OPENING to PRESSURE CLOSING:

Remove BLOCK SCREWS, TRAVEL INDICATOR and COUPLING BLOCK. Remove UPPER ADJUSTING SCREW, BOLTS, and BONNET. Lift out Diaphragm Assembly (Crosshatched). Remove SPRING, SPRING PLATES and PIVOT. Rotate Diaphragm Assembly when pulling UPPER STEM through LOWER ADJUSTING SCREW so as not to damage O RING, 153Q - 1", and 530Q - 2".

Unscrew UPPER STEM and replace in opposite end of PIVOT SLEEVE.

Using COUPLING BLOCK, pull LOWER STEM up to open position. Thread LOWER ADJUSTING SCREW in YOKE until end is flush with inside surface of YOKE. Set PIVOT on top of LOWER ADJUSTING SCREW with the beveled surface up. Replace SPRING with a SPRING PLATE in each end.

Invert Diaphragm Assembly from its original position and replace. Be sure UPPER STEM and LOWER STEM meet. With BLOCK SCREWS through INDICATOR, replace COUPLING BLOCK matching match marks. Replace BONNET and BOLTS and INDICATOR is in "Open" position. then tighten one turn. Move BREATHER PLUG to YOKE (Lower Diaphragm Housing). Connect Diaphragm Pressure from PILOT to BONNET (Upper Diaphragm Housing).

Models sold earlier than July 2014 will only have one O RING 491 - 1", 532 - 2" that will need to be switched to the pressurized area of TOPWORKS

VOLUME-MILLIONS CU. FT. PER 24 HOURS - 65 SP. GR. AT 14.4 & 60°

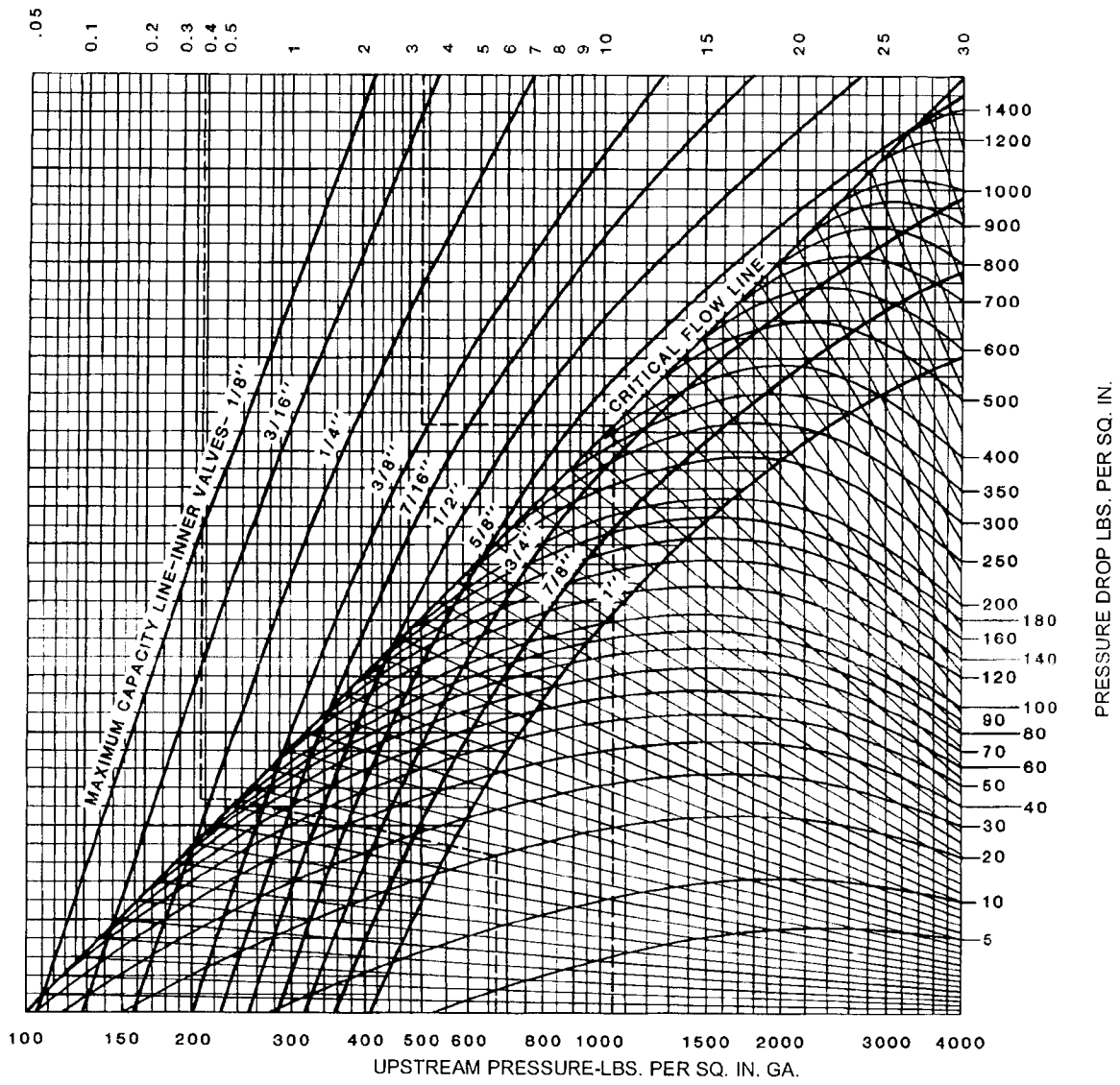

Gas capacities are based on pressures taken immediately upstream from the valve in a wide open position. Indicated volumes have been corrected for supercompressibility.

HOW TO USE CHART: PRESSURE DROP LESS THAN CRITICAL FLOW with: UPSTREAM PRESSURE 670 pounds gauge; PRESSURE DROP 20 pounds; VOLUME 380,000 Cu. Ft. per 24 hours.

Locate 670 at bottom of chart. Project a vertical line to intersect the 20 pound PRESSURE DROP line, and using sloping GUIDE LINES, project this point to the CRITICAL FLOWLINE. A horizontal line drawn through this point intersects all INNER VALVE lines at the maximum capacity of 430,000 Std. Cu. Ft. per 24 hours. A 3/8" is 0.78 and a 1/2" is 1.43. Select the inner valve size for the desired over-capacity.

CRITICAL FLOW with: UPSTREAM PRESSURE 1050 pounds gauge. PRESSURE DROP 600 pounds. VOLUME 3.3 millions per 24 hours.

Locate1050 at bottom of chart. Project a vertical line to intersect the CRITICAL FLOW LINE. A horizontal line drawn through this point intersects all INNER VALVE LINES at the maximum capacity of each for the above conditions. A 3/8" inner valve maximum capacity is 3.4 millions and a 1/2" is y6.4 millions. Select the inner valve size for the desired over-capacity.

*For Gravity correction multiply above capacities by $\sqrt{.65/G}$; where G equals specific gravity of gas.

See Liquid Capacity Chart for maximum pressure drops on large inner valves.

Flow rates are for steady flow conditions over a 24-hour period. Corrections should be made to deal; with intermittent flow conditions.

KIMRAY INC.®

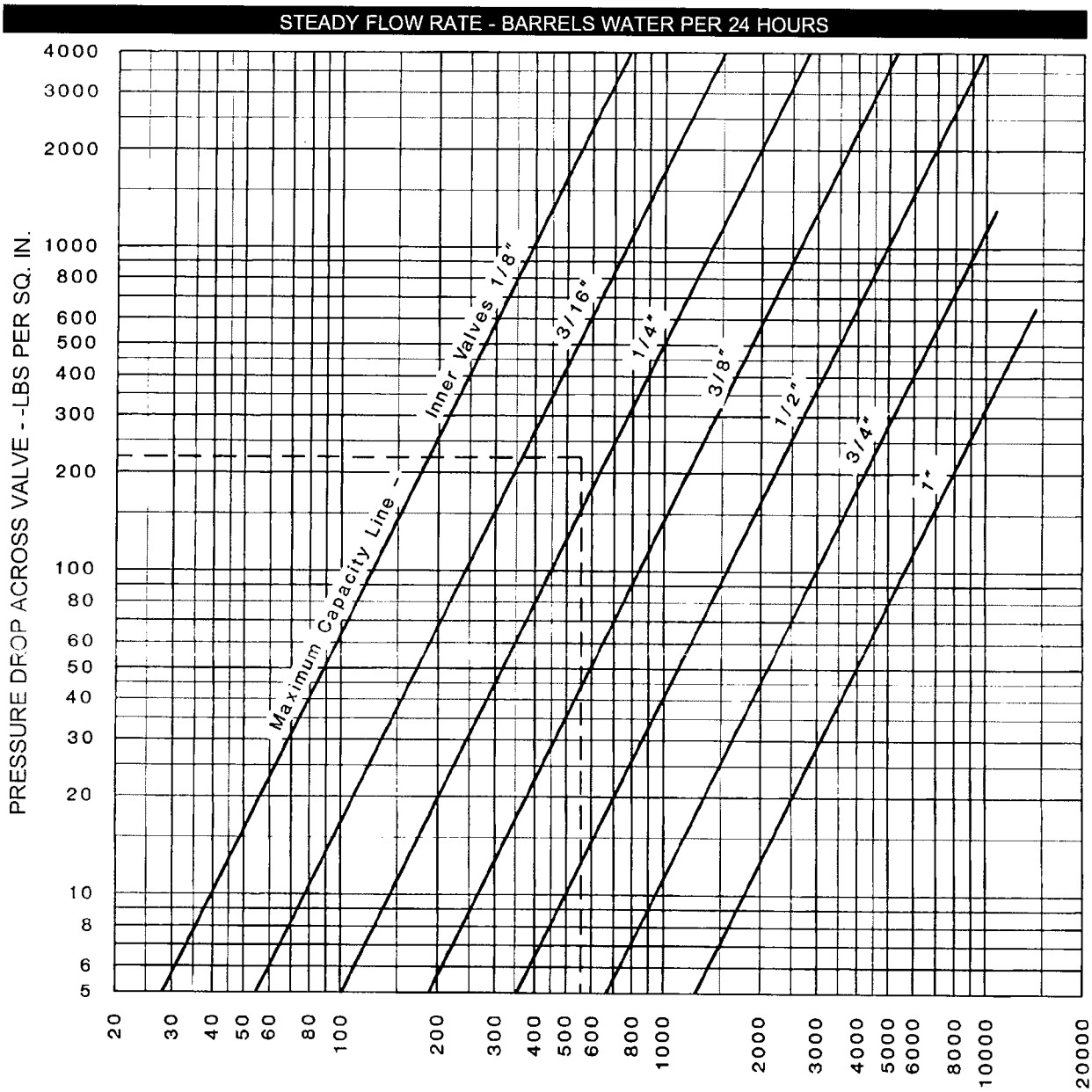

A good rule to follow when sizing liquid valves discharging from any kind of accumulator is to assume a volume at least twice that expected under steady flow conditions.

HOW TO USE CHART: Assume that it is desired to handle 275 barrels of water per day under steady flow conditions with a 225 psig pressure drop across the valve. Using the rule above we will use a volume of 550 barrels. The intersection of the 550 barrel line and the 225 psig pressure drop line lies between the 3/16" and 1/4" inner valve lines. Since the inner valve lines indicated maximum capacities, we must therefore select the 1/4" inner valve size to handle this volume.

*For gravity correction multiply above capacities by $1/\sqrt{G}$; where G equals specific gravity of flowing liquid.

MAXIMUM PRESSURE DROP for LARGE INNER VALVES

1" CONTROL VALVES			2" CONTROL VALVES		
I.V.	THROTTLE	RELIEF	I.V.	THROTTLE	RELIEF
1/2"	1200	2400	1"	650	1300
3/8"	1850	3700	3/4"	1350	2700

Above values are for valves furnished with standard springs for 20 psig diaphragm pressure.

NOTE: Flow rates are for steady flow conditions over a 24-hour period. Corrections should be made to deal with intermittent flow conditions.

1" HPCV DIMENSIONS

1" HPCV

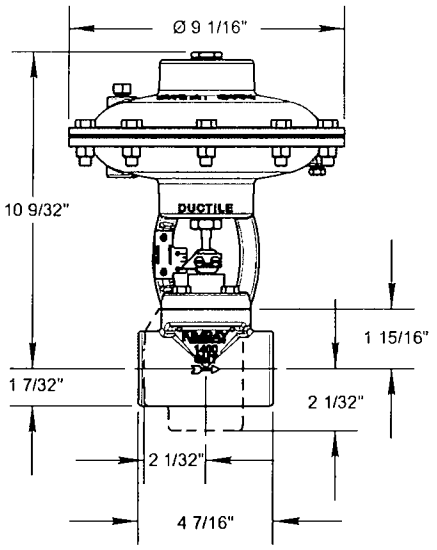

1" SMS

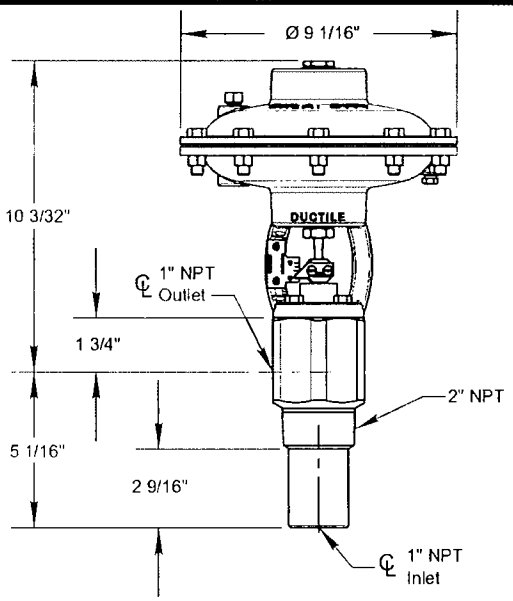

1" SMVA/T

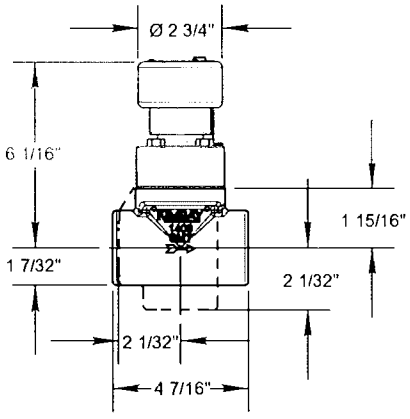

1" HPCV -65 TOPWORKS

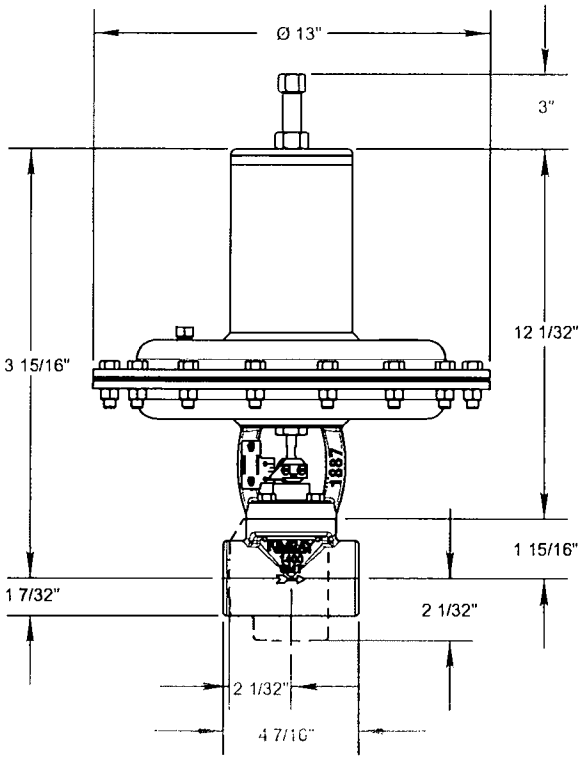

1" SMS -65 TOPWORKS

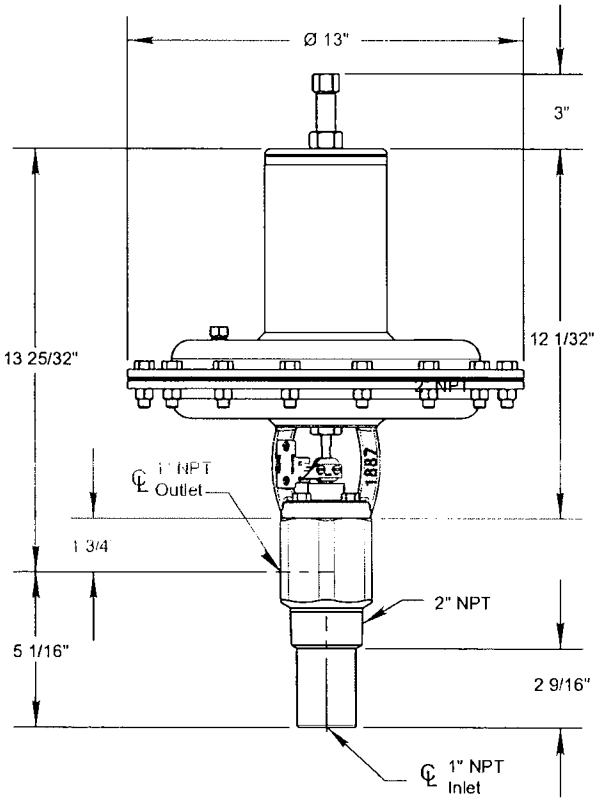

FLANGED BODY DIMENSIONS

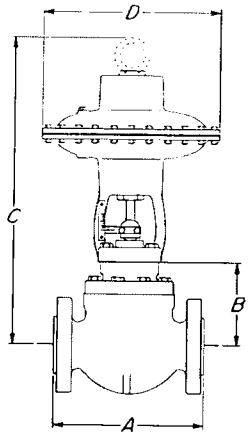

	SIZE	BODY STYLE	A	B	C	D
STANDARD	1"	150RF	7 1/4"	1 15/16"	10 1/2"	9 1/8"
		150RTJ	7 5/8"	1 15/16"	10 1/2"	9 1/8"
		300RF	7 3/4"	1 15/16"	10 1/2"	9 1/8"
		300RTJ	8 1/8"	1 15/16"	10 1/2"	9 1/8"
		600RF	8 1/4"	1 15/16"	10 1/2"	9 1/8"
		600RTJ	8 1/4"	1 15/16"	10 1/2"	9 1/8"
		1500RF	10 3/4"	1 15/16"	10 1/2"	9 1/8"
		1500RTJ	10 3/4"	1 15/16"	10 1/2"	9 1/8"
	2"	150RF	10"	3 3/16"	14 1/2"	12 7/8"
		150RTJ	10 3/8"	3 3/16"	14 1/2"	12 7/8"
		300RF	10 1/2"	3 3/16"	14 1/2"	12 7/8"
		300RTJ	11"	3 3/16"	14 1/2"	12 7/8"
		600RF	11 1/4"	3 3/16"	14 1/2"	12 7/8"
		600RTJ	11 3/8"	3 3/16"	14 1/2"	12 7/8"
		1500RF	13 3/8"	3 3/16"	14 1/2"	12 7/8"
		1500RTJ	13 1/2"	3 3/16"	14 1/2"	12 7/8"
PISTON BALANCED	2"	150RF	10"	5 5/8"	17"	12 7/8"
		300RF	10 1/2"	5 5/8"	17"	12 7/8"
		600RF	11 1/4"	5 5/8"	17"	12 7/8"
		1500RF	13 3/8"	5 5/8"	17"	12 7/8"
		1500RTJ	13 1/2"	5 5/8"	17"	12 7/8"
	3"	150RF	11 3/4"	7 1/4"	27"	15 3/4"
		300RF	12 1/2"	7 1/4"	27"	15 3/4"
		600RF	13 1/4"	7 1/4"	27"	15 3/4"
		600RTJ	13 3/8"	7 1/4"	27"	15 3/4"
	4"	150RF	13 7/8"	11"	30"	15 3/4"
		300RF	14 1/2"	11"	30"	15 3/4"
		600RF	15 1/2"	11"	30"	15 3/4"
	6"	150RF	17 3/4"	11 3/16"	34 1/2"	20 7/16"
		300RF	18 5/8"	11 3/16"	34 1/2"	20 7/16"
		600RF	20 1/16"	11 3/16"	34 1/2"	20 7/16"
	8"	150RF	21 3/8"	11 5/16"	34 1/2"	20 1/2"
		300RF	22 3/8"	11 5/16"	34 1/2"	20 1/2"
		600RF	24"	11 5/16"	34 1/2"	20 1/2"
	10"	150RF	26 1/2"	11 5/16"	34 1/2"	20 1/2"
		300RF	27 7/8"	11 5/16"	34 1/2"	20 1/2"
		600RF	29 9/16"	11 5/16"	34 1/2"	20 1/2"

Current Revision:
Change 2" 1500RF "A" dimension

GB

GENERAL INSTALLATION AND MAINTENANCE INSTRUCTIONS

Note: These general Installation and Maintenance Instructions must be read in conjunction with the Instruction Sheet for the specific product.

INSTALLATION

ASCO Numatics components are intended to be used only within the technical characteristics as specified on the nameplate. Changes to the equipment are only allowed after consulting the manufacturer or its representative. Before installation, depressurize the piping system and clean internally.
The equipment may be mounted in any position if not otherwise indicated on the product by means of an arrow.
The flow direction and pipe connection of valves are indicated on the body.

The pipe connections have to be in accordance with the size indicated on the nameplate and fitted accordingly.

Caution:
- Reducing the connections may cause improper operation or malfunctioning.
- For the protection of the equipment install a strainer or filter suitable for the service involved in the inlet side as close to the product as possible.
- If tape, paste, spray or a similar lubricant is used when tightening, avoid particles entering the system.
- Use proper tools and locate wrenches as close as possible to the connection point.
- To avoid damage to the equipment. DO NOT OVERTIGHTEN pipe connections
- Do not use valve or solenoid as lever.
- The pipe connections should not apply any force, torque or strain to the product.

ELECTRICAL CONNECTION

In case of electrical connections, they are only to be made by trained personnel and have to be in accordance with the local regulations and standards.

Caution:
- Turn off electrical power supply and de-energize the electrical circuit and voltage carrying parts before starting work.
- All electrical screw terminals must be properly tightened according to the standards before putting into service.
- Dependent upon the voltage electrical components must be provided with an earth connection and satisfy local regulations and standards.

The equipment can have one of the following electrical terminals.
- Spade plug connections according to ISO-4400 or 3 x DIN-46244 (when correctly installed, this connection provides IP-65 protection).
- Embedded screw terminals in metal enclosure with "Pg" cable gland
- Spade terminals (AMP type).
- Flying leads or cables.

PUTTING INTO SERVICE

Before pressurizing the system, first carry-out an electrical test. In case of solenoid valves, energize the coil a few times and notice a metal click signifying the solenoid operation.

SERVICE

Most of the solenoid valves are equipped with coils for continuous duty service. To prevent the possibility of personal or property damage, do not touch the solenoid which can become hot under normal operating conditions.

SOUND EMISSION

The emission of sound depends on the application, medium and nature of the equipment used. The exact determination of the sound level can only be carried out by the user having the valve installed in his system

MAINTENANCE

Maintenance of ASCO Numatics products is dependent on service conditions. Periodic cleaning is recommended, the timing of which will depend on the media and service conditions. During servicing, components should be examined for excessive wear. A complete set of internal parts is available as spare parts or rebuild kit. I a problem occurs during installation/maintenance or in case of doubt please contact ASCO Numatics or authorized representatives.

A separate Declaration of Incorporation relating to EEC-Directive 89/392/EEC Annex IIB is available on request. Please provide product identification number and serial numbers of products concerned.

The product complies with the essential requirements of the EMC Directive 89/336/EEC and amendments and the Low Voltage directives 73/23/EEC and 93/68/EEC. A separate Declaration of Conformity is available on request. Please provide product Identification number and serial numbers of the products concerned.

FR

INSTRUCTIONS GÉNÉRALES D'INSTALLATION ET D'ENTRETIEN

Note: Ces instructions générales d'installation et d'entretien complètent la notice spécifique du produit.

MONTAGE

Les composants ASCO Numatics sont conçus pour les domaines de fonctionnement indiqués sur la plaque signalétique ou la documentation. Aucune modification ne peut être réalisée sur le matériel sans l'accord préalable du fabricant ou de son représentant. Avant de procéder au montage, dépressuriser les canalisations er effectuer un nettoyage interne.
A moins qu'une fléche ou la notice n'indique un sens de montage spécifique de la tête magnétique, le produit peut être monté dans n'importe quelle position
Le sens de circulation du fluide est indiqué par repères sur le corps er dans la documentation.
La dimension des tuyauteries doit correspondre au raccordement indiqué sur le corps, l'étiquette ou la notice.

Attention:
- Une restriction des tuyauteries peut entrainer des dysfonctionnements.
- Afin de protéger le matériel, installer une crépine ou un filtre adéquat en amont, aussi près que possible du produit.
- En cas d' utilisation de ruban; pâte, aérosol ou autre lubrifiant lors du serrage, veiller à ce qu" aucun corps étranger ne pénètre dans le circuit.
- Utiliser un outillage approprié et placer les clés aussi près que possible du point de raccordement.
- Afin d'éviter toute détérioration, NE PAS TROP SERRER les raccords des tuyauteries.
- Ne pas se servir de la vanne ou de tête magnétique comme d'un levier.
- The pipe connections should not apply any force, torque or strain to the product.

RACCORDEMENT ÉLECTRIQUE

Le raccordement électrique doit être réalisé par un personnel qualifié et selon les normes et règlements locaux.

Attention:
- Avant toute intervention, couper l'alimentation électrique pour mettre hors tension les composants.
- Toutes les bornes à vis doivent être serrées correctement avant la mise en service.
- Selon la tension, les composants électrique doivent être mis à la terre conformément aux normes et règlements locaux.

Selon les cas, le raccordement électrique s'effectué par:
- Connecteur débrochable ISO-4400 ou 3 x DIN-46244 avec degré de protection IP 65 lorsque le raccordement est correctement effectué.
- Bornes à vis solidaires du bobinage, sous boiter métallique avec presse-étoupe "Pg--".
- Cosses (type AMP).
- Fils ou câbles solidaires de la bobine.

MISE EN SERVICE

Avant de mettre le circuit sous pression, effectuer un essai électrique. Dans le cas d'une électrovanne, mettre la bobine sous tension plusieurs fois er écouter le "clic" métallique qui signale le fonctionnement de la tête magnétique.

FONCTIONNEMENT

La plupart des électrovannes comportant des bobinages prévus pour mise sous tension permanente. Pour éviter toute brûlure, ne pas toucher la tête magnétique qui, en fonctionnement normal et en permanence sous tension, peut atteindre une température élevée.

BRUIT DE FONCTIONNEMENT

Le bruit de fonctionnement varie selon l'utilisation, le fluide et le type de matériel employé. L'utilisateur ne pourra déterminer avec précision le niveau sonore émis qu'après avoir monté le composant sur l'installation.

ENTRETIEN

L'entretien nécessaire aux produits ASCO Numatics varie avec leurs conditions d'utilisation. Il est souhaitable de procéder à un nettoyage périodique dont l'intervalle varie suivant la nature du fluide, les conditions de fonctionnement et le milieu ambiant. Lors de l'intervention. Les composants doivent être examinés our détecter toute usure excessive. Un ensemble de pièces internes est proposé en pièces de rechange pour procéder à la réfection. En cas de problème lors du montage/entretien ou en cas de doute, veuillez contacter ASCO Numatics ou ses représentants officiels.

Conformément à la directive CEE 89/392/EEC Annexe IIB une Déclaration d'incorporation peut être fournie sur demande. Veuillez nous indiquer le numéro d'accusé de réception (AR) et les références ou codes des produits concernés.

Ce produit est conforme aux prescriptions les plus importantes de la directive CEM 89/336/CEE et amendments et aux directives base tension 73/23/EEC et 93/68/EEC. Une déclaration de conformité peut être fournie sur simple demande. Veuillez nous indiquer le numéro d'accusé de réception (AR) ainsi que l,les numéros de série des produits concernés.

DE

ALLGEMEINE BETRIEBSANLEITUNG

Achtung: Diese Allgemeine Betriebsanleitung gilt in Zusammenhang mit der jeweiligen Betriebsanleitung für die speziellen Produkte.

EINBAU

Die ASCO Numatics-Komponenten dürfen nur innerhalb der auf den Typenschildern angenebenen Daten eingesetzt warden, Veränderungen an den Produkten sind nur nach Rücksprache mit ASCO Numatics zulässig.
Vor dem Einbau der Ventile muß das Rohrleitungssystem drucklos geschaltet und innen gereinigt werden.
Die Einbaulage der Produkte ist genereil beliebig. Ausnahme: Die mit einem Pfeil gekennzeichneten Produkte müssen entsprechend der Pfeilrichtung montiert werden.
Die Durchflußrichtung und der Eingang von Ventilen sind gekennzeichnet.

Die Rohranschlüsse sollten entsprechend den Größenangaben auf den Typenschildern mit handelsüblichen Verschraubungen durchgeführt werden. Dabei ist folgendes zu beachten:
- Eine Reduzierung der Anschlüsse kann zu Leistungs-und Funktionsminderungen führen.
- Zum Schutz der Ventile sollten Schmutzfänger oder Filter so dicht wie möglich in den Ventileingang integriert werden.
- Bei Abdichtung am Gewinde ist darauf zu achten, daß kein Dichtungsmaterial in die Rohrleitung oder das Ventil gelangt.
- Zur Montage darf nur geeignetes Werkzeug verwendetwerden.
- Konische Verschraubungen sind sorgfältig anzuziehen. Es ist darauf zu achten, daß beim Anziehen das Gehäuse nicht beschädigt wird.
- Spule und Führungsrohr von Ventilen dürfen nicht als Gegenhalter benutzt werde.
- Die Rohrleitungsanschlüsse sollen fluchten und dürfen keine Spannungen auf das Ventil übertragen.

ELECTRISCHER ANSCHLUß

Der elektrische Anschluß ist von Fachpersonal entsprechend den geltenden VDE-und CEE Richtlinien auszuführen. Es ist besonders auf foigendes zu achten:
- Vor Beginn der Arbeiten ist sicherzustellen, daß alle elektrischen Leitungen und Netzteile spannungslos geschaltet sind.
- Alle Anschlußklemmen sind nach Beendigung der Arbeiten vorschriftsmäßig entsprechend den j geltenden Regeln anzuziehen.
- Je nach Spannungsbereich muß das Ventil nach den geltenden Regeln einen Schutzleiteranschluß erhalten.

Der Magnetantrieb kann je nach Bauart folgende Anschlüsse haben:
- Anschluß für Gerätesteckdose nach DIN 43650 Form A/ISO 4400 oder 3 x DIN 46244 (durch ordnungsgemäße Montage der Gerätesteckdose wird Schutzklasse IP 65 erreicht).
- Anschlüsse innerhalb eines Blechgehäuses mittels Schraubklemmen. Kabeleinführung ins Gehäuse mit PG-Verschraubung.
- Offene Spulen mit Flachsteckern (AMP-Fahnen) oder mit eingegossenen Kabelenden.

INBETRIEBNAHME

Vor Druckbeaufschlagung des Produktes sollte eine elektrische Funktionsprüfung erfolgen:

Bei Ventilen Spannung an der Magnetspule mehrmals ein-und ausschalten. Es muß ein Klicken zu hören sein.

BETRIEB

Die meisten Ventile sind mit Spulen für Dauerbetrieb ausgerüstet. Zur Vermeidung von Personen-und Sachschäden soilte jede Berührung mit dem Ventil vermieden werden, da die Magnetspule bei längerem Betrieb sehr heiß werden kann.

GERÄUSCHEMISSION

Diese hängt sehr stark vom Anwendungsfall, den Betriebsdaten und dem Medium, mit denen das Produkt beaufschlagt wird, ab. Eine Aussage über die Geräuschemission des Produktes muß deshalb von demjenigen getroffen werden, der das Produkt innerhalb einer Maschine in Betrieb nimmit.

WARTUNG

Die Wartung hängt von den Einsatzbedigungen ab. In entsprechenden Zeitabständen muß das Produkt geöffnet und gereinigt werden. Für die Überholung der ASCO Numatics-Produkte können Ersatzteilsätze geliefert werden. Treten Schwierigkeiten bei Einbau, Betrieb oder Wartung auf, sowie bei Unklarheiten, ist mit ASCO Numatics Rücksprache zu halten.

ASCO Numatics Produkte sind entsprechend der EG-Richtlinie 89/392/EWG gefertigt.

Eine separate Herstellererklärung im Sinne der Richtlinie 89/392/EWG Anhang IIB ist auf Anfrage erhältlich. Geben Sie bitte für die Produkte die Nummer der Auftragsbestätigung und die Seriennummer an.

Dieses Produkt entspricht den grundlegenden Bestimmungen der EMV-Richtlinie 89/336/EWG, cinschi. Nachtrags, sowie den Niederspannungsrichtlinien 73/23/EWG u. 93/68/EWG. Bitte geben Sie die Auftragsbestätigungsnummer und die Serienummern der betreffenden Produkte an.

ASCO
50 Hanover Road
Florham Park, New Jersey 07932
Tel. (973) 966-2000
Fax (973) 966-2628

ASCO
1561 Columbia Highway
Aiken, South Carolina 29801
Tel. (803) 641-9200
Fax (803) 641-9290

ASCO Scientific
50 Hanover Road
Florham Park, New Jersey 07932
Tel. (973) 236-6160
Fax (973) 966-6461

All Rights Reserved.

ES CE

INSTRUCCIONES GENERALES DE INSTALACION Y MANTENIMIENTO

Nota: Estas instrucciones Generales de Instalación y Mantenimiento deben considerarse en conjunción con la Hoja de instrucciones de cada producto.

INSTALLACION

Los componentes ASCO Numatics sólo deben utilizarse dentro de las especificaciones técnicas que se especifican en su placa de caracteristicas o catálogo. Los cambios en el equipo sólo estarán permitidos después de consultar al fabricante o a su representante. Antes de la instalación despresurice el sistema de tuberías y limpie internamente.

El equipo puede utilizarse en cualquier posición si no estuviera indicado lo contratrio sobre el mismo mediante una flecha o en el catálogo.

En el cuerpo o en el catálogo se indican el sentido del fluido y la conexión de las válvulas a la tubería.

Las conexiones a la tubéria deben corresponder al tamaño indicado en la placa de caracteristicas la etiqueta o el catálogo y ajustarse adecuadamente.

Precaución:

- La reducción de las conexiones puede causar operaciones incorrectas o defectos de functionamiento.
- Para la protección de equipo se debe instalar, en el parte de la entrada y tan cerca como sea posible del producto, un filtro adecuado.
- Si se utilizara cinta, pasta, apray u otros lubricantes en el ajuste, se debe evitar que entren partículas en el producto.
- Se debe utilizar las herramientas adecuadas y colocar llaves inglesas lo mas cerca posible del punto de conexión.
- Para evitar daños al equipo, NO FORZAR las conexiones a la tubería.
- No utilizar la válvula o el solenoide como palanca.
- Las conexiones a la tuberia no producirán ninguna fuerza, par o tensión sobre el producto.

CONEXION ELECTRICA

Las conexiones eléctricas serán realizadas por personal cualificado y deberán adaptarse a las normas y regulaciones locales.

Precaución:

- Antes de comenzar el trabajo, desconecte el suministro de energia eléctrica y desenergice el circuito eléctrico y los elementos portadores de tensión.
- Todos los terminales eléctricos deben estar apretados adecuamente según normas antes de su puesta en servicio.

Según el voltaje, los componentes eléctricos deben disponer de una conexión a tierra y satisfacer las normas y regulaciones locales.

El equipo puede tener uno de los siguientes terminales eléctricos:

- Conexiones desenchufables segun ISO-4400 or 3 x DIN-46244 (cuando se instala correctamente esta conexión proporciona una protección IP-65).
- Terminales de tornillo con carcasa metálica con entrada de cable de conexión roscada "PG".
- Conector desenchufable (tipo AMP).
- Salida de cables.

PUESTA EN MARCHA

Se debe efectuar una prueba eléctrica antes de someter a presión el sistema. En el caso de las válvulas solenoides, se debe energizar varias veces la bobina y comprobar que se produce un sonido metálico que indica el funcionamiento del solenoide.

SERVICIO

La mayor parte de las válvulas solenoides se suministran con bobinas para un servicio continuo. Con el fin de evitar la posibilidad de daños personales o materiales no se debe tocar el solenoide, ya que puede haberse calentado en condiciones normales de trabajo.

EMISION DE RUIDOS

La emisión de ruidos depende de las aplicación, medio y naturaleza del equipo utilizado. Una determinacion exacta del nivel de ruido sólamente se puede llevar a cabo por el usuario que disponga la válvula instalada en su sistema.

MANTENIMIENTO

El maintenimiento de los productos ASCO Numatics depende de las condiciones de servicio. Se recomienda una limpieza periódica, dependiendo de las condiciones del medio y del servicio. Durante el servicio, los componentes deben ser examinados por si hubieran desgastes excesivos. Se dispone de un juego completo de partes internas como recambio o kit de montaje. Si ocurriera un problema durante las instalación/ matenimiento o en caso de duda contactar con ASCO Numatics o representantes autorizados.

Se dispone, por separado y bajo demanda, de una Declaración de Incorporación conforme a la Directiva CEEC 89/392/EEC Anexo IIB. Rogamos que nos faciliten los códigos y números de acceptación de pedido correspondientes.

El producto es conforme a las principales descripciones de la directiva CEM 89/336/CEE y a las enmiendas y directivas baja tension 73/23/CEE y 93/68/CEE. Si lo desea, podemos facilitare una Declaración de Conformidad por separado. Rogamos faciliten el número de confirmación de pedido y los números de serie de los respectivos productos.

IT CE

ISTRUZIONI DI INSTALLAZIONE E DI MANUTENZIONE GENERALE

Nota: Queste instruzioni devono essere lette in congiunzione con li manuale specifico del prodotto.

INSTALLAZIONE

Le elettrovalvole devono essere utilizzate esclusivamente rispettando le caratteristiche techniche specificate sulla targhetta. Variazioni sulle valvole o sul piloti sono possibili solo dopo aver consultato il costruttore o i suoi rappresentanti. Prima dell'installazione depressurizzare i tubi e pulire internamente.

Le elettrovalvole possone essere montate in tutte le posiziono. Diversamente, una freccia posta sulla valvola indica che deve essere montata in posizione verticale e diritta.

La direzione del flusso e' indicata sul corpo della valvola per mezzo di una freccia oppure con l'etichetta "IN","1""A" o "P".

I raccordi devono essere conformi alla misura indicata sulla targhetta apposta.

Attenzione:

- Ridurre I raccordi puó causare operazioni sbagliate o malfunzionamento.
- Per proteggere il componente installare, il più vicino possibile al lato ingresso, un filtro adatto al servizio.
- Se si usano nastro, pasta, spray o lubrificanti simili durante il serraggio, evitare che delle particelle entrino nel corpo della valvola.
- Usare un'attrezzatura appropriate e utilizzare le chiavi solo sul corpo della valvola.
- Per evitare danni al corpo della valvola, NON SERRAR ECCESSIVAMENTE i tubi.
- Non usare la valvola o il pilota come una leva.
- I raccordi non devono esercitare pressione, torsione o sollecitazione sull'elettrovalvola.

ALLACCIAMENTO ELETTRICO

L'allacciamento elettrico' deve essere effettuato esclusivamente dal personale specializzato e deve essere conforme alle Norme locali.

Attensione:

- Prima di mettere in funzione togliere l'alimentazione elettrica, diseccitare il circuito elettrico e le parti sotto tensione.
- I morsetti elettrici devono essere correttamente avvitati, secondo le Norme, prima della messa in servizio.
- Le elettrovalvole devono essere provviste di morsetti di terra a seconda della tensione e delle Norme di securezza locali.

I piloti possono avere una delle seguenti caratteristiche elettrica:

- Connettore ISO-4400 o 3 x DIN-46244 (se installato correttamente é IP-65).
- Morsettería racchiusa in custodia metallica. Entrata cavi con pressacavi tipo "PG".
- Bobina con attacchi FASTON (tipo AMP).
- Bobine con fili o cavo.

MESSA IN FUNZIONE

Prima di dare pressione alla valvola, eseguire un test elettrico. Eccitare la bobina diverse volte fino a notare uno scatto metallico che dimostra il funzionamento del pilota.

SERVIZIO

Molte elettrovalvola sono provviste di bobine per funzionament continuo. Per prevenire la possibilita' di danneggiare cose o persone, non toccare il pilota.

La custodia della bobina o del pilota puó scaldarsi anche in normali condizioni di funzionamento.

EMISSIONE SUONI

L'emissione di suoni dipende dall'applicazione e dal tipo di elettrovalvola. L'utente pú stabilire esattamente il livello del suona solo dopo aver installato la valvola sui suo impianto.

MANUTENZIONE

Generalmente questi componenti non necessitano spesso di manutenzione. Comunque, in alcuni casi é necessario fare attenzione a depositi o ad eccessiva usura. Questi componenti devono essere puliti periodicamente, il tempo che intercorre tra una pulizia e l'altra varia a seconda delle condizioni di funzionamento. Il ciclo di durata dei componenti dipende dalle condizioni di funzionamento. In caso di usura é disponibile un set completo di parti interne per la revisione.

Se si incontrano problemi durante l'installazione e la manutenzione o se si hanno dei dubbi, consultare ASCO Numatics o i suoi rappresentanti.

L'utente puó richiedere al costruttore una dichiarazione separate riguardante le Direttive EEC 89/392/EEC e 91/368/EEC (vedere allegato IIB) fornendo il numero di serie e li referimento dell'ordine relativo.

Questo prodotto soddisfa i requisiti essenziali della direttiva CEM 89/336/CEE nonché il emendamenti e le direttive sulla bassa tensione 73/23/CEE e 93/68/CEE. Una Dichiarazione di Conformité separata può essere ottenuta su richiesta. Si prega di fornire il numero della conferma dell'ordinativo ed i numeri di serie dei relativi prodotti.

NL CE

ALGEMENE INSTALLATIE-EN ONDERHOUDSINSTRUCTIES

N.B.: Deze algemene instructies t.a.v. installatie en onderhoud mosten in acht worden genomen tezamen met de specifieke voorschriften van het produkt.

INSTALLATIE

ASCO Numatics produkten mogen uitsluitend toegepast worden binnen de op de naamplaat aangegeven specificaties. Wijzigingen, zowel elektrisch als mechanisch, zijn alleen toegestaan na overleg met de fabrikant of haar vertegenwoordiger. Voor het inbouwen dient hat leidingssysteem drukloos gemaakt te worden en inwendig gereinigd.

De positie van de afsluiter is naar keuze te bepalen, behalve in die gevallen waarbij het tegendeel door pijlen wordt aangegeven.

De doorstroomrichting wordt bij afsluiters aangegeven op het afsluiterhuis.

De pijpaansluiting moet overeenkomstig de naamplaatgegevens plaatsvinden.

Hierbij moet men letten op:

- Een reductie van de aansluitingen kan tot prestatie-en functiestoornis leiden.
- Ter bescherming van de interne delen wordt een filter in het leidingnet aanbevolen.
- Bij het gebruik van draadafdichtingspasta of tape mogen er geen deeltjes in het leidingwerk geraken.
- Men dient uitsluitend geschikt gereedschap voor de montage te gebruiken.
- Bij konische/tapse koppelingen moet met een zodanig koppel worden gewerkt dat het produkt niet wordt beschadigd.
- Het produkt, de behuizing of de spoel mag niet als hefboom worden gebruikt.
- De pijpaansluitingen mogen geen krachten of momenten op het produkt overdragen.

ELEKTRISCHE AANSLUITING

In geval van elektrische aansluiting dient dit door vakkundig personeel te worden uitgevoerd volgens de door de plaatselijke overheid bepaalde richtlijnen

Men dient in het bijzonder te letten op:

- Voordat men aan het werk begint moeten alle spannings-voerende delen spanningsloos worden gemaakt.
- Alle aansluitklemmen moeten na het beëindigen van het werk volgens de juiste normen worden aangedraaid.
- Al naar gelang het spanningsbereik, moet het produkt volgens de geldende normen van een aarding worden voorzien.

Het produkt kan de volgende aansluitingen hebben:

- Stekeraansluiting volgens ISO-4400 of 3x DIN 46244 (bij juiste montage wordt de dichtheidsklasse IP-65 verkregen).
- Aansluiting binnen in het metalen huis d.m.v. schroefaansluiting. De kabeldoorvoer heeft een "PG" aansluiting.
- Spoelen met platte steker (AMP type).
- Losse of aangegoten kabels.

IN GEBRUIK STELLEN

Voordat de druk aangesloten wordt dient een elektrische test te worden uitgevoerd. Ingeval van magneetafsluiters, legt men meerdere malen spanning op de spoel aan waarbij een duidelijk "klikken" hoorbaar moet zijn bij juist funktioneren.

GEBRUIK

De meeste magneetafsluiters zijn uitgevoerd met spoelen voor continu gebruik. Omdat persoonlijke of zakelijke schade kan ontstaan bij aanraking dient men dit te vermijden, daar bij langdurige inschakeling de spoel of het spoelhuis heet kan worden.

GELUIDSEMISSIE

Dit hangt sterk af van de toepassing en het gebruikte medium. De bepaling van het geluidsniveau kan pas uitgevoerd worden nadat het ventiel is ingebouwd.

ONDERHOUD

Het onderhoud aan de afsluiters is afhankelijk van de bedrijfs-omstandigheden.

In bepaalde gevallen moet men bedacht zijn op media welke sterke vervuiling binnen in het produkt kunnen veroorzaken.

Men dient dan regelmatig inspecties uit te voeren door de afsluiter te openen en te reinigen. Indien ongewone slijtage optreedt dan zijn reserve onderdelensets beschikbaar en een inwendige revisie uit te voeren.

Ingeval problemen of onduidelijkheden tijdens montage, gebruik of onderhoud optreden dan dient men zich tot ASCO of haar vertegenwoordiger te wenden.

Een aparte fabrikanten verklaring van inbouw, in de zin van EU-richtlijn 89/392/EEG aanhangsel IIB kan door de afnemer na opgave van orderbevestigingsnummer en serienummer verkregen worden.

Dit product voldoet aan de essentiele vereisten van de EMC Richtlijn 89/336/EEG en amendementen, net als aan de richtlijnen 73/23/EEG en 93/68/EEG inzake laagspanning. Een afzonderlijke verklaring van overeenstemming is op verzoek verkrijgbaar. Vermeld a.u.b. het nummer van de opdrachtbevestiging en de serienummers van de betreffende produkten.

ASCOMATICA S.A. de C.V.
Bosques de Duraznos No. 65 - 1003A
Fraccionamentto Bosques de las Lomas
Delegacion Miguel Hidalgo
Mexico, D.F. CP11700
Tel. (52) 55-5596-7741
Fax (52) 55-5596-77192628

ASCO Valve Canada
P.O. Box 160 (Airport Road)
Brantford, Ontario N3T 5M8
Tel. (519) 758-2700
Fax (519) 758-5540

ASCOTECH S.A.de C.V.
Circuito Del Progreso No. 27
Parque Industrial Progreso
Mexicali, B.C. Mexico
Tel. (011) 52-686-559-8500
Fax (011) 52-686-559-8548

All Rights Reserved.

Torque Chart

Part Name	Torque Value in Inch-Pounds	Torque Value in Newton-Meters
cartridge assembly	175 ± 25	19,8 ± 2,8

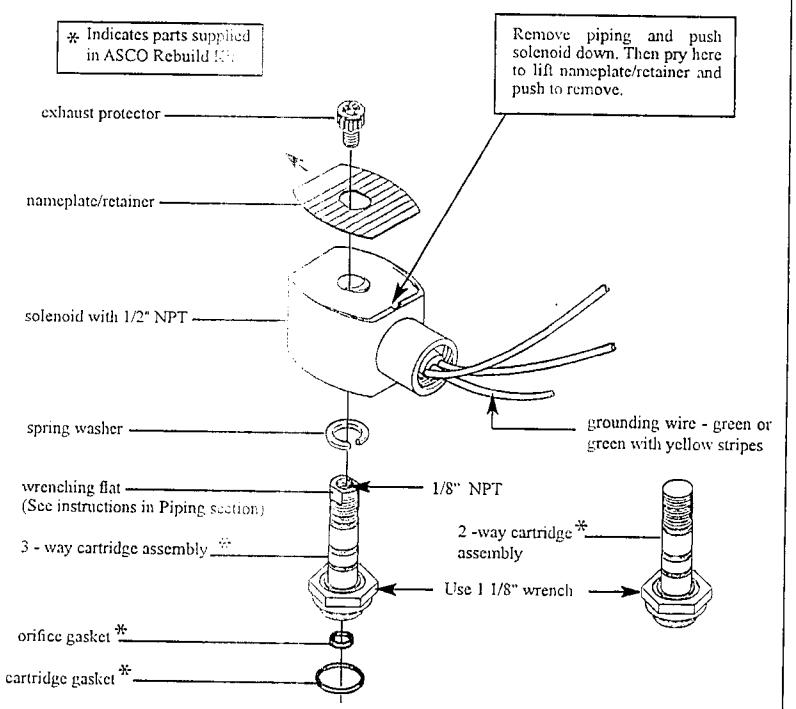

Figure 1. Assembly HV 270684 low power solenoid.

Torque Chart

Part Name	Torque Value in Inch-Pounds	Torque Value in Newton-Meters
cartridge assembly	175 ± 25	19,8 ± 2,8
terminal block screw	10 ± 2	1,1 ± 0,2
socket head screw	15 - 20	1,7 - 2,3

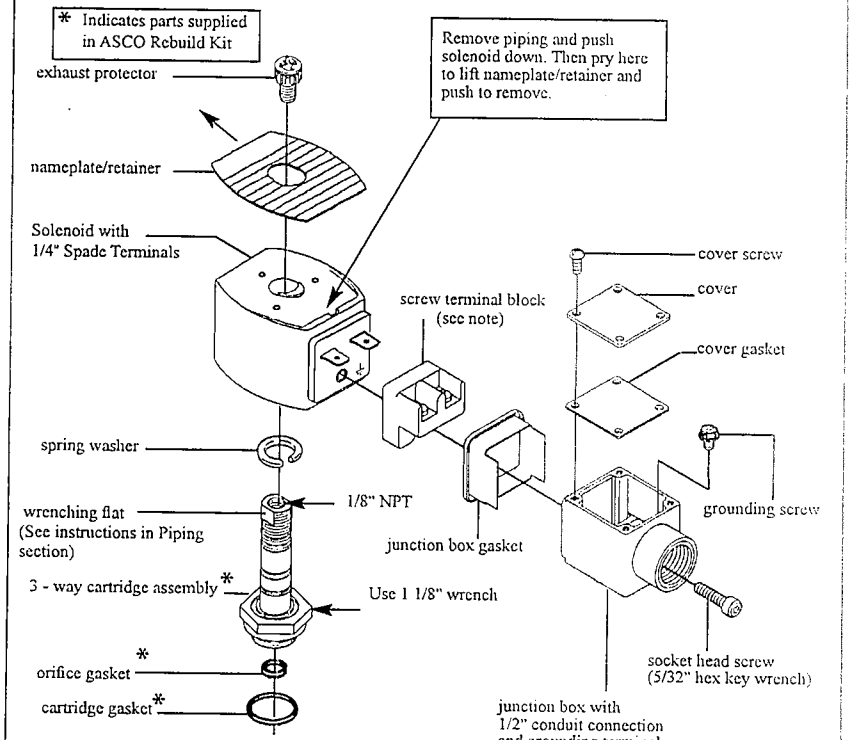

Note:
Junction box with screw terminals shown. With screw terminal block removed, remaining parts comprise the junction box for spade terminal construction.

Figure 2. Junction box solenoid with 1/4" spade terminals or screw terminals.

Installation & Maintenance Instructions

ASCO Red-Hat II ®

2-WAY AND 3-WAY LOWER POWER GENERAL PURPOSE OR WATERTIGHT/EXPLOSIONPROOF SOLENOIDS

ASSEMBLY
HV 270684

Catalog Nos.
8003G300
8003G301

NOTICE: See separate valve installation and maintenance instructions for information on: Operation, Positioning, Mounting, Piping, Filter Requirements for Air or Inert Gas, Flow Controls, Cleaning, Preventive Maintenance, Cause of Improper Operation, Disassembly and Reassembly of Basic Valve.

DESCRIPTION

Catalog Numbers 8003G301 2-way construction and 8003G300 3-way construction are epoxy encapsulated pull-type solenoids. The green solenoid with lead wires and 1/2" NPT conduit connection is designed to meet Enclosure Type 1-General Purpose, Type 2- Dripproof, Types 3 and 3S-Raintight , and Types 4 and 4X - Watertight . The black solenoid on catalog numbers prefixed "EF" or "EV" is designed to meet Enclosure Types 3 and 3S -Raintight, Types 4 and 4X -Watertight, Types 6 and 6P Submersible,Type7(A,B,C, & D) Explosionproof Class I, Division 1, Groups A, B, C, & D and Type 9 (E, F & G) - Dust - Ignition proof Class II, Division 1, Groups E, F & G and Nonincendive for Class I, Division 2. Catalog number prefix "EV" denotes stainless steel construction.

Optional Feature For Type 1 - General Purpose Construction Only

This junction box construction meets Enclosure Types 2, 3, 3S, 4, and 4X. Only solenoids with 1/4" spade or screw terminals may have a junction box. The junction box provides a 1/2" conduit connection, grounding and spade or screw terminal connections within the junction box (See Figure 2).

OPERATION

Series 8003G - When the solenoid is energized, the core is drawn into the cartridge assembly.

INSTALLATION

Check nameplate for correct catalog number, service, and wattage. Check front of solenoid for voltage and frequency.

FOR BLACK ENCLOSURE TYPES 7 AND 9 ONLY

⚠CAUTION: To prevent fire or explosion, do not install solenoid and/or valve where ignition temperature of hazardous atmosphere is less than 85°C.

NOTE: These solenoids have an internal non-resetable thermal fuse to limit solenoid temperature in the event that extraordinary conditions occur which could cause excessive temperatures. These conditions include high input voltage, a jammed core, excessive ambient temperature or a shorted solenoid, etc. This unique feature is a standard feature only in solenoids with black explosionproof/dust-ignitionproof enclosures (Types 7 & 9).

⚠CAUTION: To protect the solenoid valve or operator, install a strainer or filter, suitable for the service involved in the inlet side as close to the valve or operator as possible. Clean periodically depending on service conditions.

Temperature Limitations

For maximum valve ambient temperatures, refer to chart. The temperature limitations listed only indicate maximum application temperatures for field wiring rated at 90°C. See valve installation and maintenance instructions for maximum fluid temperature.

Temperature Limitations For Catalog Numbers 8003G300 and 8003G301 Solenoids

Watt Rating	Class of Insulation	Maximum Ambient Temperature °F	Maximum Ambient Temperature °C
1.4	F	140	60
1.7	F	140	60

Minimum ambient temperature -40°F (-40°C).

Positioning

This solenoid is designed to perform properly when mounted in any position. However, for optimum life and performance, the solenoid should be mounted vertically and upright to reduce the possibility of foreign matter accumulating in the cartridge assembly area.

Piping (General Instructions)

On some valve constructions, there is pilot exhaust (from the top of the solenoid) when the valve shifts. The pilot exhaust may be connected to the main exhaust if the air or inert gas cannot be exhausted directly to the atmosphere.

⚠CAUTION: Debris entering 1/8" NPT connection at top of cartridge assembly may cause valve malfunction. Use exhaust protector provided when venting to atmosphere or connect to an exhaust system. The exhaust protector provides a degree of protection against falling dirt, rain, sleet, snow and dust. External formation of ice on the exhaust protector may cause valve malfunction. For this case, an alternate means of venting is required.

Connect piping to valve according to markings on valve body. Refer to flow diagrams provided in OPERATION section of basic valve installation and maintenance instructions.

⚠CAUTION: To avoid damage or accidental disengagement of cartridge assembly from valve body, hold cartridge assembly securely by wrenching flats when installing or removing piping at 1/8" NPT connection on top of the solenoid.

E3103-12/01 All Rights Reserved.

©ASCO Valve, Inc 50 Hanover Road, Florham Park, New Jersey 07932 www.ascovalve.com

Apply pipe compound sparingly to male pipe threads only. If applied to valve threads,the compound may enter the valve and cause operational difficulty. Avoid pipe strain by properly supporting and aligning piping. When tightening the pipe, do not use valve or solenoid as a lever. Locate wrenches applied to valve body or piping as close as possible to connection point.

⚠CAUTION: These solenoids are intended for use on clean dry air or inert gas, filtered to 50 micrometers or better. The dew point of the media should be at least 10°C (18°F) below the minimum temperature to which any portion of the clean air/inert gas system could be exposed to prevent freezing. If lubricated air is used, the lubricants must be compatible with Buna N elastomers. Diester oils may cause operational problems. Instrument air in compliance with ANSI/ISA Standard S7.3-1975 (R1981) exceeds the above requirements and is, therefore, an acceptable media for these valves.

Wiring

Wiring must comply with local codes and the National Electrical Code. All solenoids supplied with lead wires are provided with a grounding wire which is green or green with yellow stripes and a 1/2" conduit connection. To facilitate wiring, the solenoid may be rotated 360° depending up on basic valve construction. For the watertight/explosionproof solenoids, electrical fittings must be approved for use in the approved hazardous locations. The wiring method for Nonincendive Class I, Division 2 locations shall be in accordance with Section 501-4(b) of the National Electrical Code. The field circuit may be incendive. Wiring methods suitable for ordinary locations may not be used for wiring in incendive circuits.

⚠CAUTION: Excessive conduit strain on solenoid housing may damage solenoid or cause valve malfunction. Be sure conduit and additional junction boxes within the conduit run to the solenoid housing are properly aligned and supported.

Additional Wiring Instructions For Junction Box (optional feature)

The junction box is used with spade or screw terminal solenoids only and is provided with a grounding screw and a 1/2" conduit connection. Connect #12-18 AWG standard copper wire only to the screw terminals. Within the junction box use field wire that is rated 90°C or greater for connections. After electrical hookup, replace cover gasket, cover and screws. Tighten screws evenly in a crisscross manner.

MAINTENANCE

⚠WARNING: To prevent the possibility of death, serious injury or property damage, turn off electrical power, depressurize solenoid valve and vent fluid to a safe area before servicing.

Cleaning

All solenoid operators and valves should be cleaned periodically. The time between cleaning will vary depending on medium and service conditions. In general, if the voltage to the solenoid is correct, sluggish valve operation, excessive noise or leakage will indicate that cleaning is required. In the extreme case faulty valve operation will occur and the valve may fail to shift. Clean strainer or filter when cleaning the valve.

Preventive Maintenance

- Keep medium flowing through the valve as free from dirt and foreign material as possible.
- Periodic exercise of the valve should be considered if ambient or fluid conditions are such that corrosion, elastomer degradation, fluid contamination build up, or other conditions that could impede solenoid valve shifting are possible. The actual frequency of exercise necessary will depend on specific operating conditions. A successful operating history is the best indication of a proper interval between exercise cycles.
- Depending on the medium and service conditions, periodic inspection of internal valve parts for damage or excessive wear is recommended. Thoroughly clean all parts. If parts are worn or damaged, install a complete rebuild kit.

Causes of Improper Operation

- **Faulty Control Circuit:** Check the electrical system by energizing the solenoid. Check for loose or blown fuses, open-circuited or grounded solenoid, broken lead wires or splice connections.
- **Burned-Out Solenoid:** Check for open-circuited solenoid. Replace if necessary. Check supply voltage; it must be the same as specified on name plate/retainer and marked on the solenoid.
- **Low Voltage:** Check voltage across the solenoid leads. Voltage must be at least 85% of rated voltage.

Solenoid Replacement / Disassembly & Reassembly

1. Disconnect conduit, coil leads, and grounding wire.
2. Remove piping from 1/8" NPT connection on top of solenoid for 3-way construction.

⚠CAUTION: To avoid damage or accidental disengagement of cartridge assembly from valve body, hold cartridge assembly securely by wrenching flats when installing or removing piping at top of solenoid.

3. Push down on solenoid. Then using a suitable screwdriver, insert blade between solenoid and nameplate/retainer. Pry up slightly and push to remove nameplate/retainer.
4. Slip solenoid and spring washer off cartridge assembly.
5. Unscrew cartridge assembly from valve body and remove orifice gasket and cartridge gasket.
6. Refer to basic valve installation and maintenance instructions for further disassembly.
7. When reassembling, torque cartridge assembly to 175 ± 25 in-lbs [19,8 ± 2,8 Nm].

ORDERING INFORMATION FOR ASCO SOLENOIDS

When Ordering Solenoids for ASCO Solenoid Valves, order the number stamped on the solenoid. Also specify voltage and frequency.

©ASCO Valve, Inc 50 Hanover Road, Florham Park, New Jersey 07932 www.ascovalve.com

Installation & Maintenance Instructions

2-WAY DIRECT-ACTING SOLENOID SHUT OFF VALVES
NORMALLY CLOSED OPERATION
LOW POWER-PEAK-AND-HOLD
STAINLESS STEEL CONSTRUCTION - 1/4" & 3/8" ANPT PIPE THREADS
FUEL GAS SERVICE

SERIES
HV427246
I&M No.V9637R1

IMPORTANT: See separate solenoid installation and maintenance instructions for information on: Wiring, Solenoid Temperature, Causes of Improper Operation, and Coil or Solenoid Replacement.

DESCRIPTION

Series HV427246 valves are 2-way direct-acting normally closed solenoid valves designed for fuel gas service. HV427246 are provided with explosionproof solenoid enclosure.

⚠ CAUTION: The valve is to be used in conjunction with an external PWM (Pulse Width Modulation) controller to provide low holding power.

OPERATION

Energized, peak: Apply normal full line voltage for .2-.5 seconds, either 12 or 24 VDC, as listed on nameplate. Valve is open.

Energized, hold: Reduce PWM duty cycle to 29% or 37% minimum at 500-2000Hz. Valve remains open.

De-energized: No voltage applied. Valve is closed. Once de-energized following a peak-and-hold schedule, the valve may not be re-energized via peak-and-hold for at least one minute.

⚠ WARNING: Supervisory and leakage current above .010 Amp will cause improper operation. Valve may not close. Check system current.

INSTALLATION

Check nameplate for correct catalog number, pressure, voltage and wattage. Never apply incompatible fluids or exceed pressure rating of the valve. Installation and valve maintenance to be performed by qualified personnel.

NOTE: Inlet port will either be marked "1" or "IN". Outlet port will be marked "2" or "OUT". (See Figure 1)

Future Service Considerations

Provision should be made for performing seat leakage, external leakage, and operational tests on the valve with a nonhazardous,noncombustible fluid after disassembly and reassembly.

Specifications

Max. Inlet Pressure: 50psig (3.45 bar)

Max. Operating Pressure Differential:

- 1/4" ANPT Pipe Threads: 50psig (3.45 bar)
- 3/8" ANPT Pipe Threads: 35psig (2.41 bar)

Electrical Characteristics:

Catalog Number	Elect'l Input	Coil Class	Power Consumption		% Duty Cycle
			Peak	Hold	
HV427246001, 002, 003, 004	12VDC, 24VDC	H	10.6 W	0.85W	29%
HV427246101, 102, 103, 104			10.6 W	1.40W	37%

Peak Limits: .2 to .5 seconds max. at line voltage
Hold Limits: 29% or 37% Duty cycle at specified voltage range at 500-2000Hz. PWM

Temperature Limitations

Watt Rating	Max. Temperature			
DC	Ambient		Fluid	
	°C	°F	°C	°F
10.6 / 0.85	51.7	125	51.7	125
10.6 / 1.40				

Note: Minimum Ambient and Fluid temperature is -40°C (-40°F).

Positioning

These valves are designed to perform properly when mounted in any position. However, for optimum life and performance, the solenoid should be mounted vertically and upright to reduce the possibility of foreign matter accumulating in the solenoid base sub-assembly area.

©ASCO Valve, Inc.® 50 Hanover Road, Florham Park, New Jersey 07932 www.ascovalve.com 8216440-08/11 All Rights Reserved

Mounting

Two (2) M5 threaded holes are provided in the valve body for mounting. (See Figure 1)

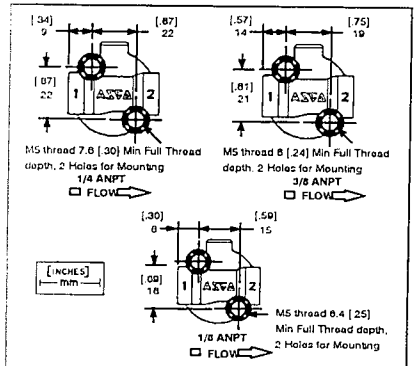

Figure 1. Mounting Dimensions

Piping

Connect piping or tubing to valve according to markings on valve body. Inlet port will either be marked "1" or "IN". Outlet port will be marked "2" or "OUT". Wipe the pipe threads clean of cutting oils. Apply pipe compound sparingly to male pipe threads only. If applied to valve threads, the compound may enter the valve and cause operational difficulty. Avoid pipe strain by properly supporting and aligning piping. When tightening the pipe, do not use valve or solenoid as a lever. Locate wrenches applied to valve body or piping as close as possible to connection point.

IMPORTANT: To protect the solenoid valve, install a strainer or filter suitable for the service involved, in the inlet side as close to the valve as possible. Clean periodically depending on service conditions. See ASCO Series 8600 and 8601 for strainers.

MAINTENANCE

⚠ WARNING: To prevent the possibility of death, serious injury or property damage, turn off electrical power, depressurize valve, and vent fluid to a safe area before servicing the valve.

NOTE: It is not necessary to remove the valve from the pipeline for repairs.

Cleaning

All solenoid valves should be cleaned periodically. The time between cleanings will vary depending on the medium and service conditions. In general, if the voltage to the coil is correct, sluggish valve operation, excessive noise or leakage will indicate that cleaning is required. In the extreme case, faulty valve operation will occur and the valve may fail to open or close. Clean strainer or filter when cleaning the valve.

Preventive Maintenance

- Keep the medium flowing through the valve as free from dirt and foreign material as possible.
- Periodic exercise of the valve should be considered if ambient or fluid conditions are such that corrosion, elastomer degradation, fluid contamination build up, or other conditions that could impede solenoid valve shifting are possible. The actual frequency of exercise necessary will depend on specific operating conditions. A successful operating history is the best indication of a proper interval between exercise cycles.
- Depending on the medium and service conditions, periodic inspection of internal valve parts for damage or excessive wear is recommended. Thoroughlly clean all parts.

Causes of Improper Operation

- **Faulty Control Circuit:** Check the electrical system by energizing the solenoid. A metallic *click* signifies that the solenoid is operating. Absence of the *click* indicates loss of power supply. Check for loose or blown fuses, open-circuited or grounded solenoid, broken lead wires or splice connections.
- **Burned-Out Solenoid:** Check for open-circuited solenoid. Replace if necessary. Check supply voltage; it must be the same as specified on nameplate/retainer and marked on the solenoid. Check ambient temperature and check that the core is not jammed.
- **Low Voltage:** Check voltage across the terminals. Voltage must be at least 85% of the rated voltage.

Valve Disassembly (see Figure 2)

1. Disassemble valve using exploded views for identification of parts.
2. Remove solenoid, see separate instructions.
3. Unscrew solenoid base sub-assembly with wrench. Remove core assembly, core spring, and solenoid base gasket from valve body.
4. All parts are now accessible for cleaning.

©ASCO Valve, Inc.® 50 Hanover Road, Florham Park, New Jersey 07932 www.ascovalve.com

Valve Reassembly

1. Use exploded views for identification, orientation and placement of parts.
2. Lubricate all gaskets with DOW CORNING® 200 Compound lubricant or an equivalent high–grade silicone oil.
3. Replace solenoid base gasket, core assembly with core spring and solenoid base sub–assembly. Note: For core assemblies with internal type core springs, install wide end of core spring in core assembly first, closed end of core spring protrudes from top of core assembly. (see Figure 2)
4. Torque solenoid base sub–assembly to 175 ± 25 in–lbs [19,8 ± 2,8 Nm].
5. Install solenoid. See separate solenoid instructions. Then make electrical hookup to solenoid.

⚠ WARNING: To prevent the possibility of death, serious injury or property damage, check valve for proper operation before returning to service. Also perform internal seat and external leakage tests with a nonhazardous, noncombustible fluid.

6. Restore line pressure and electrical power supply to valve.
7. After maintenance is completed, operate the valve a few times to be sure of proper operation. A metallic *click* signifies the solenoid is operating.

Torque Chart

Part Name	Torque Value Inch–Pounds	Torque Value Newton–Meters
Solenoid base sub–assembly	175 ± 25	19,8 ± 2,8

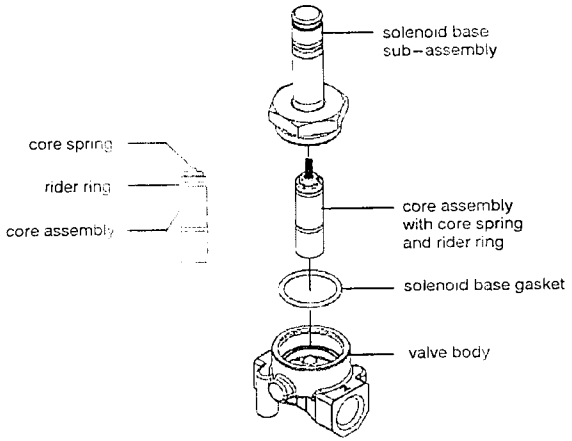

Figure 2. Series HV427246 1/4" & 3/8" ANPT Valve Construction

©ASCO Valve, Inc. 50 Hanover Road, Florham Park, New Jersey 07932 www.ascovalve.com

March 2009

Types 67C and 67CR Installation Sheet

Introduction

This Installation Sheet covers the installation and startup of the Types 67C and 67CR instrument supply regulators. If maintenance is required, refer to the 67C Series Instruction Manual, form 5469. Contact your local Sales Office to receive a copy of the instruction manual.

Specifications

- **Maximum Inlet Pressure:**
  250 psig (17,2 bar)
- **Maximum Emergency Outlet Pressure:**
  50 psi (3,5 bar) over outlet pressure setting
- **Outlet Pressure Ranges:**
  0 to 20 psig (0 to 1,4 bar)
  0 to 35 psig (0 to 2,4 bar)
  0 to 60 psig (0 to 4,1 bar)
  0 to 125 psig (0 to 8,6 bar)
- **Temperature Capabilities with Nitrile (NBR):**
  Standard Bolting: -20° to 180°F (-29° to 82°C)
  Stainless Steel Bolting: -40° to 180°F (-40° to 82°C)

Installation

WARNING

Personal injury, property damage, equipment damage, or leakage due to escaping gas or bursting of pressure-containing parts may result if this regulator is overpressured or is installed where service conditions could exceed the limits given in the specifications, or where conditions exceed any ratings of the adjacent piping or piping connections. To avoid such injury or damage, provide pressure-relieving or pressure-limiting devices (as required by the appropriate code, regulation, or standard) to prevent service conditions from exceeding those limits.

The internal relief valve in the Type 67CR regulator does not provide full overpressure protection. The internal relief valve is designed for minor seat leakage only. If maximum inlet pressure to the Type 67CR exceeds the maximum pressure ratings of the downstream equipment or exceeds the maximum allowable outlet pressure of the Type 67CR, additional overpressure protection is required.

1. Regulator operation within ratings does not preclude the possibility of physical damage from external sources or debris in the lines. Regulators should be inspected for damage periodically and after an overpressure condition.
2. Only personnel qualified through training and experience should install, operate, and maintain a regulator. Make sure there is no damage to or foreign material in the regulator and all tubing/piping is free of debris.
3. Install the regulator so that flow is from the IN to the OUT connection as marked on the regulator body.

WARNING

A regulator may vent some gas to the atmosphere. In hazardous or flammable gas service, vented gas may accumulate and cause personal injury, death, or property damage due to fire or

D103073X012

explosion. Vent a regulator in hazardous gas service to a remote, safe location away from air intakes or any hazardous area. The vent line or stack opening must be protected against condensation or clogging.

4. A clogged spring case vent hole may cause the regulator to function improperly. To keep this vent hole from being plugged (and to keep the spring case from collecting moisture, corrosive chemicals, or other foreign material) orient the vent to the lowest possible point on the spring case or otherwise protect it. Inspect the vent hole regularly to make sure it is not plugged. Spring case vent hole orientation may be changed by rotating the spring case with respect to the body. A 1/4 NPT spring case vent may be remotely vented by installing tubing or piping into the vent.
5. For regulator shutdown, install upstream block and vent valves and downstream block and vent valves (if required), or provide some other suitable means of properly venting the regulator inlet and outlet pressures.
6. Apply a good grade of pipe compound to the male pipe threads before making connections, making sure not to get the pipe compound inside the regulator.
7. Install tubing fitting or piping into the 1/4 NPT inlet connection on the body (key 1) and into the 1/4 NPT body outlet connection.
8. The second 1/4 NPT outlet can be used for a gauge or other use. If not used, it must be plugged.

Startup and Adjustment

1. With proper installation completed and downstream equipment properly adjusted, slowly open the upstream and downstream shutoff valve (when used) while using pressure gauges to monitor pressure.

WARNING

To avoid personal injury, property damage, or equipment damage caused by bursting of pressure containing parts or explosion of accumulated gas, never adjust the control spring to produce an outlet pressure higher than the upper limit of the outlet pressure range for that particular spring. If the desired outlet pressure is not within the range of the control spring, install a spring of the proper range.

2. If outlet pressure adjustment is necessary, monitor outlet pressure with a gauge during the adjustment procedure. The regulator is adjusted by loosening the locknut (key 19), if used, and turning the adjusting screw or handwheel (key 18) clockwise to increase or counterclockwise to decrease the outlet pressure setting. Tighten the locknut to maintain the adjustment position.

Parts List

Key	Description
1	Body
3	Flange Screw
4[1]	O-Ring
7	Spring Case
10[1, 2]	Valve Cartridge
11[1, 2]	Valve Plug
12[1, 2]	Valve Spring
13[1, 2]	Valve Retainer
14[1, 2]	O-Ring
15[1, 2]	Relief Valve Soft Seat
16[1]	Diaphragm Assembly
17	Spring
18	Adjusting Screw
19	Locknut
20	Upper Spring Seat
39	Bottom Plate

1. Recommended Spare Part
2. Valve cartridge assembly includes keys 10, 11, 12, 13, 14, and 15

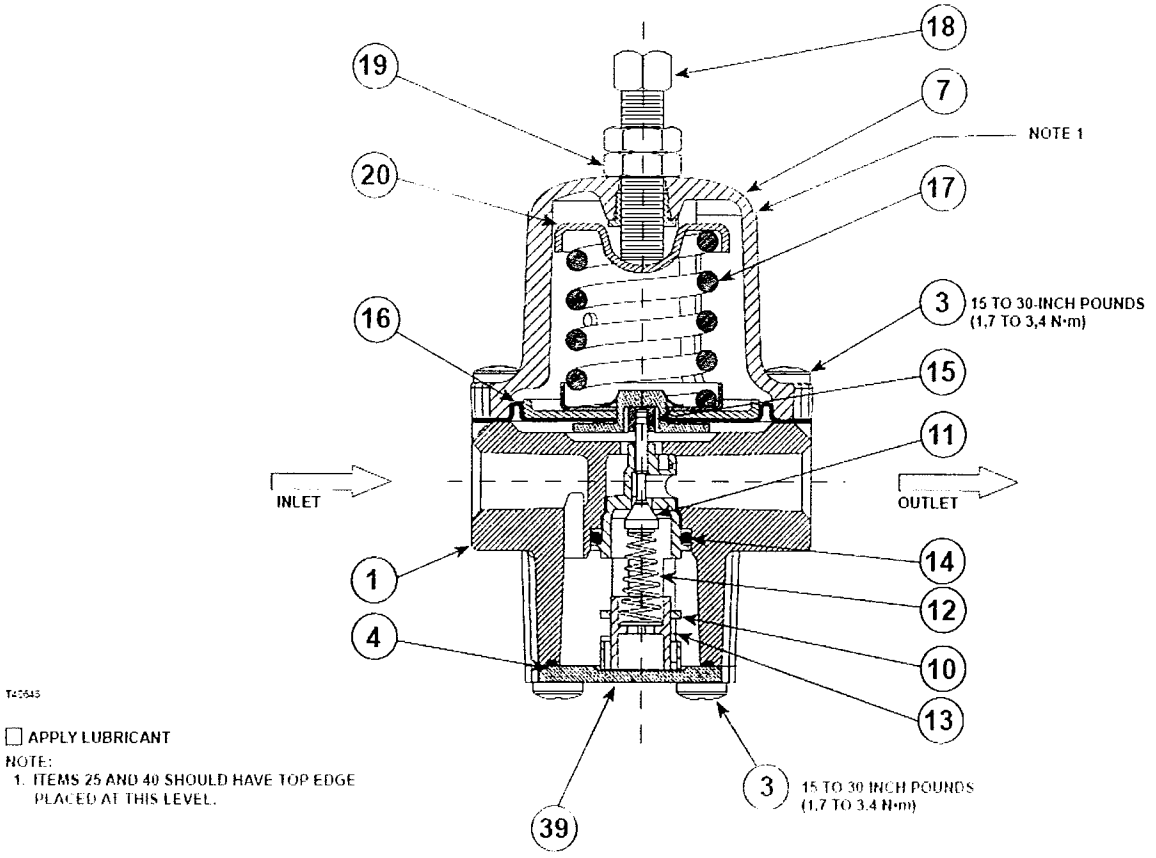

Figure 1. *67C Series Assembly*

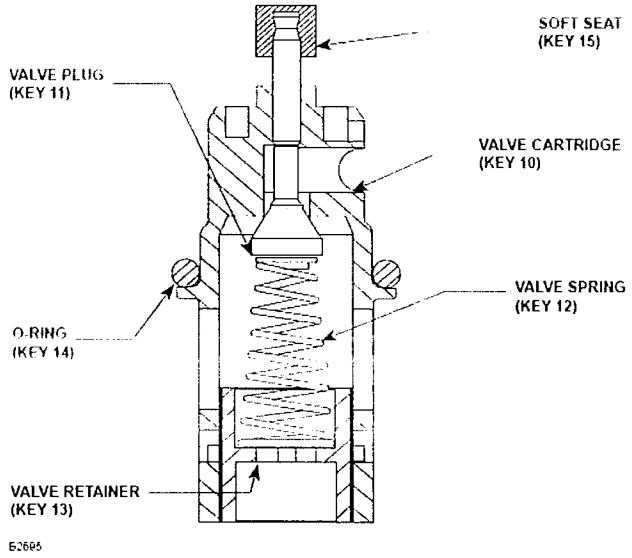

Figure 2. *Valve Cartridge Assembly*

Industrial Regulators

Emerson Process Management
Regulator Technologies, Inc.

USA - Headquarters
McKinney, Texas 75069-1872 USA
Tel: 1-800-558-5853
Outside U.S. 1-972-548-3574

Asia-Pacific
Shanghai, China 201206
Tel: +86 21 2892 9000

Europe
Bologna, Italy 40013
Tel: +39 051 4190611

Middle East and Africa
Dubai, United Arab Emirates
Tel: +971 4811 8100

Natural Gas Technologies

Emerson Process Management
Regulator Technologies, Inc.

USA - Headquarters
McKinney, Texas 75069-1872 USA
Tel: 1-800-558-5853
Outside U.S. 1-972-548-3574

Asia-Pacific
Singapore, Singapore 128461
Tel: +65 6777 8211

Europe
Bologna, Italy 40013
Tel: +39 051 4190611
Gallardon, France 28320
Tel: +33 (0)2 37 33 47 00

TESCOM

Emerson Process Management
Tescom Corporation

USA - Headquarters
Elk River, Minnesota 55330-2445 USA
Tel: 1-763-241-3238

Europe
Selmsdorf, Germany 23923
Tel: +49 (0) 38823 31 0

For further information visit www.emersonprocess.com/regulators

The Emerson logo is a trademark and service mark of Emerson Electric Co. All other marks are the property of their prospective owners. Fisher is a mark owned by Fisher Controls, Inc., a business of Emerson Process Management.

The contents of this publication are presented for informational purposes only, and while every effort has been made to ensure their accuracy, they are not to be construed as warranties or guarantees, express or implied, regarding the products or services described herein or their use or applicability. We reserve the right to modify or improve the designs or specifications of such products at any time without notice.

Emerson Process Management does not assume responsibility for the selection, use or maintenance of any product. Responsibility for proper selection, use and maintenance of any Emerson Process Management product remains solely with the purchaser.

EMERSON.
Process Management

©Emerson Process Management Regulator Technologies, Inc , 2002, 2009; All Rights Reserved

January 2013

67C Series Instrument Supply Regulators

- Designed for Digital Instrumentation
- Optional Smart Bleed™ Construction
- Optional Stainless Steel Construction
- Compact and Light Weight
- No Air Loss
- Easy Maintenance
- Optional Integral Filter
- Optional Internal Relief Valve
- Rugged Construction

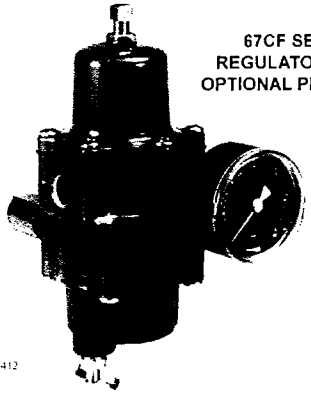

67CF SERIES FILTER REGULATOR SHOWN WITH OPTIONAL PRESSURE GAUGE

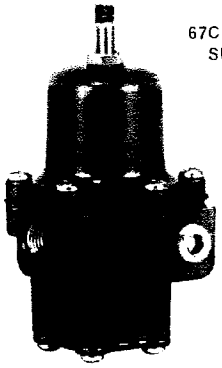

67C SERIES INSTRUMENT SUPPLY REGULATOR

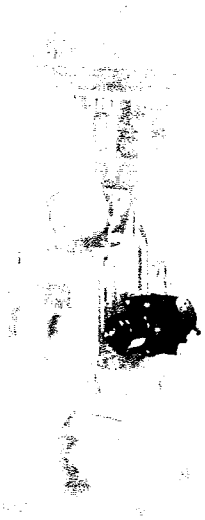

67CF SERIES REGULATOR USED AS A SUPPLY REGULATOR FOR DIGITAL INSTRUMENTATION

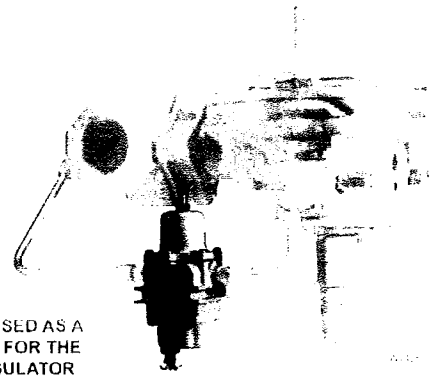

67CF SERIES REGULATOR USED AS A PILOT SUPPLY REGULATOR FOR THE TYPE 299H PRESSURE REGULATOR

Figure 1. 67C Series Instrument Supply Regulators

D102656X012

Specifications

The Specifications section gives some general specifications for the 67C Series regulator. A label on the spring case gives the control spring range for a given regulator as it comes from the factory.

Available Constructions
See Table 2

Body Size, Inlet, and Outlet Connection Style
1/4 NPT

Construction Materials
See Table 3

Maximum Inlet Pressure (Body Rating)[1]
All except Types 67CS and 67CSR: 250 psig / 17.2 bar
Types 67CS and 67CSR: 400 psig / 27.6 bar

Outlet Pressure Ranges
See Table 1

Maximum Emergency Outlet Pressure[1]
50 psi / 3.4 bar over outlet pressure setting

Flow Capacities
See Table 4

Wide-Open Flow Coefficients
Main Valve: C_g: 11.7; C_v: 0.36; C_1: 32.2
Internal Relief Valve: C_g: 1.45; C_v: 0.045; C_1: 32.8

IEC Sizing Coefficients
Main Valve: X_T: 0.66; F_L: 0.89; F_D: 0.50

Accuracy
Inlet Sensitivity for Nitrile (NBR) and Silicone (VMQ) Elastomers: Less than 0.2 psig / 14 mbar change in outlet pressure for every 25 psig / 1.7 bar change in inlet pressure
Inlet Sensitivity for Fluorocarbon (FKM) Elastomers: Less than 0.4 psig / 28 mbar change in outlet pressure for every 25 psig / 1.7 bar change in inlet pressure
Repeatability for Nitrile (NBR) and Silicone (VMQ) Elastomers: 0.1 psig / 7 mbar[2]
Repeatability for Fluorocarbon (FKM) Elastomers: 0.3 psig / 21 mbar[2]
Air Consumption: Testing repeatedly shows no discernible leakage

Types 67CR, 67CSR, 67CFR, and 67CFSR Internal Relief Performance
Low capacity for minor seat leakage only, other overpressure protection must be provided if inlet pressure can exceed the maximum pressure rating of downstream equipment or exceeds maximum outlet pressure rating of the regulator.

Approximate Weights
Types 67C, 67CR, 67CF, and 67CFR:
1 pound / 0.5 kg
Types 67CS and 67CSR:
2.5 pounds / 1.1 kg
Types 67CFS and 67CFSR:
4 pounds / 1.8 kg

Smart Bleed™ Check Valve Setpoint
6 psi / 0.41 bar differential

Pressure Registration
Internal

Drain Valve and Spring Case Vent Location
Aligned with inlet standard, other positions optional

Temperature Capabilities[1]
With Nitrile (NBR)
Standard Bolting: -20 to 180°F / -29 to 82°C
Stainless Steel Bolting: -40 to 180°F / -40 to 82°C
With Fluorocarbon (FKM):
Polyethylene Filter[5] ***(Standard)****:* 0 to 180°F / -18 to 82°C
Polyvinylidene (PVDF), Stainless Steel, or Glass Filter (Optional): 0 to 300°F / -18 to 149°C
With Silicone (VMQ)[3] Diaphragm and Low Temperature bolting: -60 to 180°F / -51 to 82°C
With Gauges: -40 to 180°F / -40 to 82°C

Types 67CF, 67CFR, 67CFS, and 67CFSR Filter Capabilities
Free Area: 12 times pipe area
Micron Rating:
Polyethylene Filter[5] ***(Standard)****:* 5 microns
Glass Fiber Filter (Optional): 5 microns
PVDF Filter (Optional): 40 microns
Stainless Steel Filter (Optional): 40 microns

Options
All Types
- Handwheel adjusting screw
- Inlet screen
- NACE MR0175[4] or NACE MR0103 construction
- Panel mount (includes spring case with 1/4 NPT vent, handwheel, and panel mounting nut)
- Closing cap (available on spring case with 1/4 NPT vent)
- Fluorocarbon (FKM) elastomers for high temperatures and/or corrosive chemicals
- Silicone (VMQ) elastomers for cold temperatures
- Fixed Bleed Restriction
- Triple scale outlet pressure gauge (Brass or Stainless steel)
- Stainless steel stem on the valve plug
- Tire valve or pipe plug in second outlet

Types 67CFR and 67CFSR only
- Smart Bleed internal check valve
- Large dripwell with manual or automatic drain

Types 67CF and 67CFR only
- Stainless steel drain valve

1 The pressure/temperature limits in this Bulletin and any applicable standard or code limitation should not be exceeded
2 Repeatability is the measure of the regulator's ability to return to setpoint consistently when traveling from steady state to transient to steady state
3 Silicone (VMQ) is not compatible with hydrocarbon gas.
4 Product complies with the material requirements of NACE MR0175 Environmental limits may apply
5 Do not use in high aromatic hydrocarbon service.

Table 1. Outlet Pressure Ranges and Control Spring Data

TYPE	OUTLET PRESSURE RANGES		CONTROL SPRING DATA						
			Color	Material	Part Number	Wire Diameter		Free Length	
	psig	bar				Inch	mm	Inch	mm
67C, 67CR, 67CF, and 67CFR	0 to 20	0 to 1.4	Green stripe	Music Wire	GE07809T012	0.135	3.43	1.43	36.2
	0 to 35	0 to 2.4	Silver		T14059T0012	0.156	3.96	1.43	36.2
	0 to 60	0 to 4.1	Blue stripe		T14058T0012	0.170	4.32	1.43	36.2
	0 to 125	0 to 8.6	Red stripe		T14060T0012	0.207	5.26	1.43	36.2
	0 to 35	0 to 2.4	Silver stripe	Inconel®	T14113T0012	0.156	3.96	1.43	36.2
	0 to 60	0 to 4.1	Blue		T14114T0012	0.172	4.37	1.43	36.2
	0 to 125	0 to 8.6	Red		T14115T0012	0.207	5.26	1.43	36.2
67CS, 67CSR, 67CFS, and 67CFSR	0 to 20	0 to 1.3	Green	Inconel®	10C1729X012	0.135	3.43	1.50	38.1
	0 to 35	0 to 2.4	Silver stripe		T14113T0012	0.156	3.96	1.43	36.2
	0 to 60	0 to 4.1	Blue		T14114T0012	0.172	4.37	1.43	36.2
	0 to 125	0 to 8.6	Red		T14115T0012	0.207	5.26	1.43	36.2
	0 to 150	0 to 10.3	Black		10C1730X012	0.250	6.35	1.77	44.9

Inconel® is a marked own by Special Metals Corporation.

Introduction

The 67C Series regulators are typically used to provide constantly controlled, reduced pressures to pneumatic and electro-pneumatic controllers and other instruments. These direct-operated regulators are suitable for most air or gas applications. Other applications include providing reduced pressures to air chucks, air jets, and spray guns.

Features

- **Compact**—The 67C Series regulators are engineered for outstanding performance in a compact, lightweight package.
- **Panel Mounting**—Panel mount construction includes spring case with 1/4 NPT vent, handwheel adjusting screw, and mounting nut.
- **Instrument Supply Regulator**—The Types 67CF, 67CFR, 67CFS, and 67CFSR provide a clean air supply to a variety of pneumatic and electro-pneumatic instrumentation.
- **Digital Instrument Supply Regulator**—Designed to meet the accuracy, repeatability, and hysteresis demands of digital instrumentation.
- **Pilot Supply Regulator**—Improves the accuracy of two-path control regulators by reducing inlet sensitivity caused by fluctuating inlet pressures.
- **Sour Gas Service Capability**—NACE MR0175 and MR0103 compliant construction available.
- **Optional Stainless Steel Construction**—The Types 67CS, 67CSR, 67CFS, and 67CFSR provide high resistance to corrosion, which is especially beneficial for offshore applications.
- **Full Usable Capacity**—Fisher® regulators are laboratory tested. 100% of the published capacities can be used with confidence.
- **Internal Relief**—The Types 67CR, 67CSR, 67CFR, and 67CFSR have an internal relief valve with a soft seat for reliable shutoff with no discernible leakage. These regulators are recommended for conserving plant air.
- **Smart Bleed™**—Opens to exhaust downstream pressure when inlet pressure drops below outlet pressure. Recommended for dead-end service.
- **Integral Filter**—The Types 67CF, 67CFR, 67CFS, and 67CFSR have an integral filter ensuring clean downstream air supply.
- **Ease of Maintenance**—No special tools required to perform maintenance, and all maintenance can be performed with the regulator in the line. Filter elements are easily replaced. The one-piece valve plug cartridge allows easy inspection and replacement.
- **Rugged Construction**—The 67C Series regulators are engineered for longer service life with minimal maintenance requirements.
- **Second Outlet**—Body side outlet for pressure gauge or other uses.
- **Powder Paint Coating**—Types 67C, 67CR, 67CF, and 67CFR are powder paint coated, offering impact, abrasion, and corrosion resistance. Stainless steel regulators (Types 67CS, 67CSR, 67CFS, and 67CFSR) are not painted.
- **Corrosion Resistant Fasteners**—Bolting and adjusting screw are double zinc-chromated for enhanced corrosion resistance. Optional stainless steel bolting and adjusting screw are also available.

Principle of Operation (Figure 2)

Downstream pressure is registered internally on the lower side of the diaphragm. When the downstream pressure is at or above the set pressure, the valve plug is held against the orifice and there is no flow through the regulator. When demand increases, downstream pressure drops slightly allowing the spring to extend, moving the stem down and the valve plug away from the orifice. This allows flow through the regulator.

Table 2. Available Constructions

TYPE	CONSTRUCTION FEATURES		OPTIONAL FEATURES			BODY MATERIAL	
	With Internal Relief	With Filter	Smart Bleed™ Internal Check Valve Airset	Drain Valve	Fixed Bleed	Aluminum	Stainless Steel
67C						X	
67CR	X				X	X	
67CS							X
67CSR	X				X		X
67CF		X		X		X	
67CFR	X	X	X	X	X	X	
67CFS		X		X			X
67CFSR	X	X	X	X	X		X

Table 3. Construction Materials

MATERIALS	TYPE			
	67C and 67CR	67CF and 67CFR	67CS and 67CSR	67CFS and 67CFSR
BODY AND SPRING CASE	Aluminum (ASTM B85/Alloy 380)		CF8M/CF3M Stainless steel	
BOTTOM PLATE	316 Stainless steel	- - - -	316 Stainless steel	- - - -
PUSHER POST AND VALVE CARTRIDGE	Polyester resin			
UPPER SPRING SEAT	Zinc-plated steel		316 Stainless steel	
LOWER SPRING SEAT, DIAPHRAGM PLATE	Chromate conversion coated Aluminum		316 Stainless steel	
CONTROL SPRING	Plated Steel or Inconel® (NACE)		Inconel®	
VALVE PLUG	Brass stem with Nitrile (NBR) plug Aluminum stem with Nitrile (NBR) or Fluorocarbon (FKM) plug or Stainless steel stem with Nitrile (NBR) plug		316 Stainless steel stem with Nitrile (NBR) or Fluorocarbon (FKM) plug	
VALVE SPRING	Stainless steel or Inconel® (NACE)		Inconel®	
DIAPHRAGM AND O-RINGS	Nitrile (NBR), Fluorocarbon (FKM), or Silicone (VMQ)[1]			
SOFT SEAT AND GASKETS	Nitrile (NBR) or Fluorocarbon (FKM)			
BOLTING, ADJUSTING SCREW, LOCKNUT	Zinc-plated steel or Stainless steel		Stainless steel	
HANDWHEEL	Zinc-plated steel screw with resin handwheel			
FILTER RETAINER	- - - -	Plated Steel	- - - -	316 Stainless steel
FILTER ELEMENT	- - - -	Polyethylene, Glass fiber, Stainless steel, or PVDF (Plastic)	- - - -	Polyethylene, Glass fiber, 316 Stainless steel, or PVDF (Plastic)
DRAIN VALVE	- - - -	Brass or Stainless steel	- - - -	316 Stainless steel or 18-8 Stainless steel
DRIPWELL	- - - -	Aluminum (ASTM B85/Alloy 380)	- - - -	CF8M/CF3M Stainless steel

1. Silicone (VMQ) diaphragm is only available with internal relief (Types 67CR, 67CSR, 67CFR, and 67CFSR)
Inconel® is a marked own by Special Metals Corporation.

Internal Relief (Types 67CR, 67CSR, 67CFR, and 67CFSR)

If for some reason, outside of normal operating conditions, the downstream pressure exceeds the setpoint of the regulator, the force created by the downstream pressure will lift the diaphragm until the diaphragm is lifted off the relief seat. This allows flow through the token relief. The relief valve on the Type 67CR, 67CSR, 67CFR, or 67CFSR is an elastomer plug that prevents leakage of air from the downstream to atmosphere during normal operation, thereby conserving plant air.

Smart Bleed Airset

In some cases, it is desired to exhaust downstream pressure if inlet pressure is lost or drops below the setpoint of the regulator. For example, if the regulator is installed on equipment that at times has no flow demand but is expected to backflow on loss of inlet pressure. The Type 67CFR or 67CFSR can be ordered with the Smart Bleed option which includes an internal check valve for this application. During operation, if inlet pressure is lost, or decreases below the setpoint of the regulator, the downstream pressure will back flow upstream through the regulator and check valve. This option eliminates the need for a fixed bleed downstream of the regulator, thereby conserving plant air.

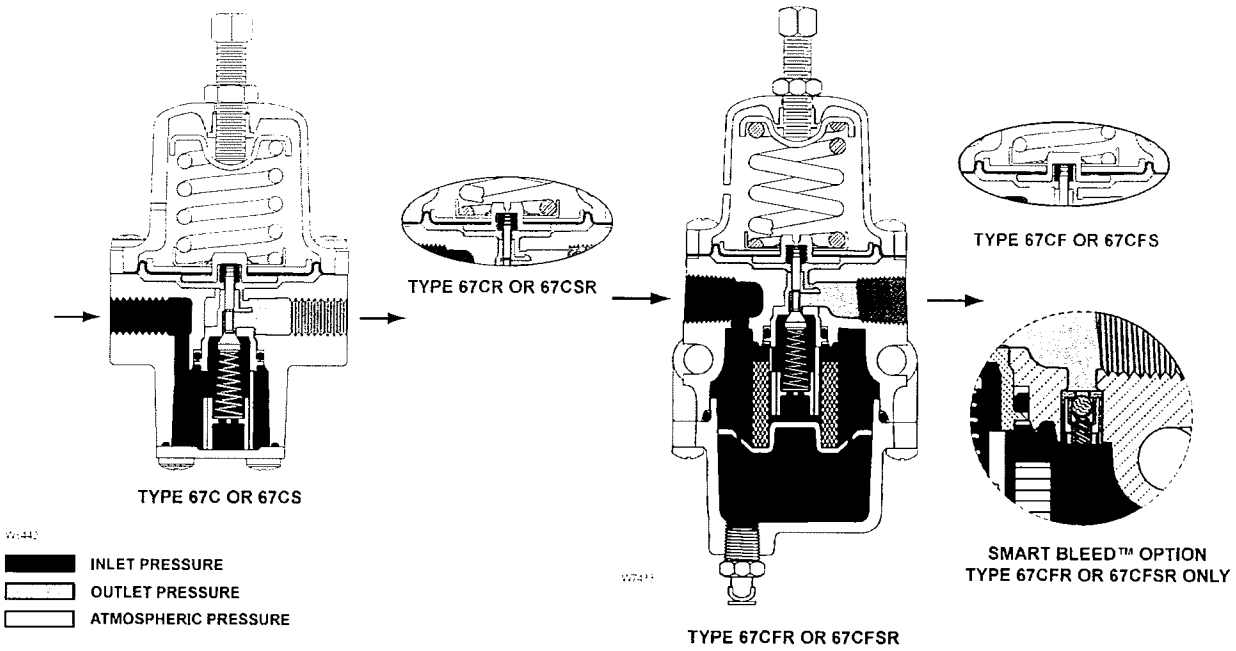

Figure 2. 67C Series Operational Schematics

Note

During normal operation the check valve's metal to metal seat allows limited flow through the regulator from the inlet to outlet, even when there is no downstream demand. To prevent downstream pressure buildup, the smart bleed option is only available with the internal relief version of the 67C Series.

Installation

The 67C Series regulators may be installed in any position. Spring case vents must be protected against the entrance of rain, snow, debris, or any other foreign material that might plug the vent openings. The inlet connection is marked "In" and the two outlet connections are marked "Out". If a pressure gauge is not installed in one outlet connection, plug the unused connection. See Figures 5 to 9 for dimensions.

Emerson Process Management Regulator Technologies, Inc. (Regulator Technologies) provides an instruction manual with every regulator shipped. Refer to this for complete installation, operation, and maintenance instructions. Included is a complete listing of individual parts and recommended spare parts.

Overpressure Protection

The 67C Series regulators have maximum outlet pressure ratings that are lower than their maximum inlet pressure ratings. A pressure-relieving or pressure-limiting device is needed if inlet pressure can exceed the maximum outlet pressure rating.

Types 67CR, 67CSR, 67CFR, and 67CFSR regulators have a low capacity internal relief valve for minor seat leakage only. Other overpressure protection must be provided if the maximum inlet pressure can exceed the maximum pressure rating of the downstream equipment or exceeds maximum outlet pressure rating of the Type 67CR, 67CSR, 67CFR, or 67CFSR regulator.

Overpressuring any portion of a regulator or associated equipment may cause leakage, parts damage, or personal injury due to bursting of pressure-containing parts or explosion of accumulated gas. Regulator operation within ratings does not preclude the possibility of damage from external sources or from debris in the pipeline. A regulator should be inspected for damage periodically and after any overpressure condition.

Refer to the Capacity Information section and the Wide-Open Flow Coefficients for Relief Valve Sizing in the Specifications section on page 2 to determine the required relief valve capacity.

Capacity Information

Table 4 shows the air regulating capacities of the 67C Series regulators at selected inlet pressures and outlet pressure settings. Flows are shown in SCFH (at 60°F and 14.7 psia) and in Nm^3/h (at 0°C and 1.01325 bar) of air.

Note

The 67C Series regulators may be sized for 100% flow using capacities as shown in Table 4. It is not necessary to reduce published capacities.

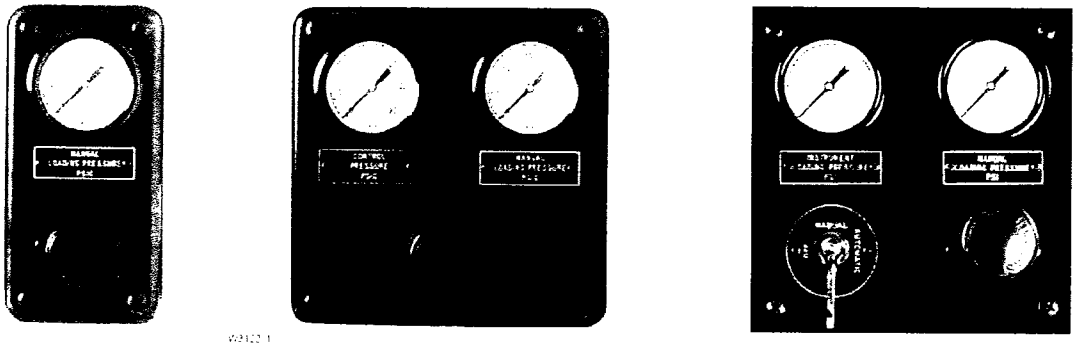

1-GAUGE PANEL | 2-GAUGE PANEL | 2-GAUGE PANEL WITH CHANGEOVER VALVE

Figure 3. *670 Series Typical Panel Layouts*

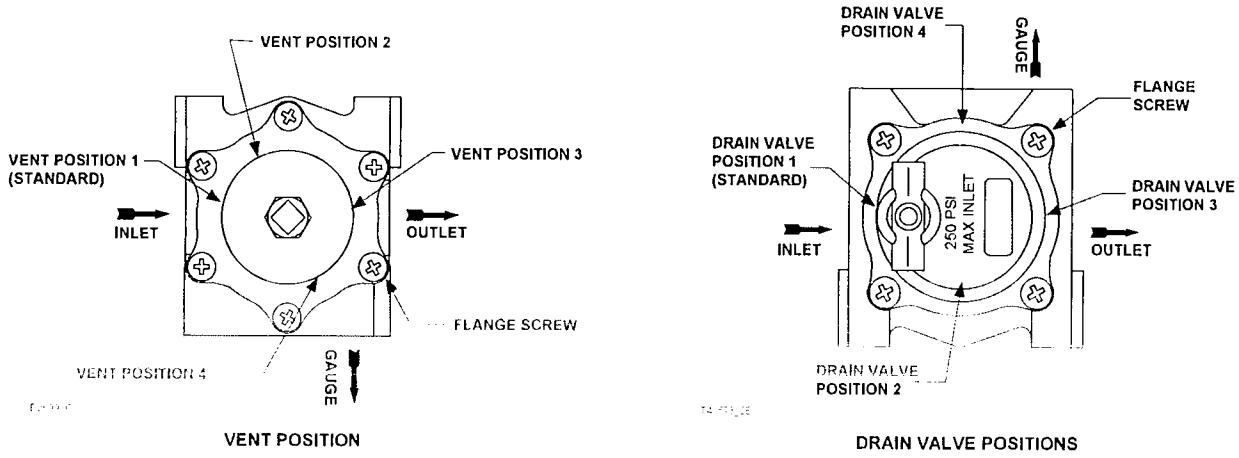

Figure 4. *67C Series Vent and Drain Valve Positions*

To determine the equivalent capacities for other gases, multiply the table capacity by the following appropriate conversion factor: 1.29 for 0.6 specific gravity natural gas, 0.810 for propane, 0.707 for butane, or 1.018 for nitrogen. For gases of other specific gravities, divide the table capacities by the square root of the appropriate specific gravity. To find wide-open flow capacities for relief sizing at any inlet pressure, perform one of the following procedures. Then, if necessary, convert using the factors provided above.

For critical pressure drops (absolute outlet pressure equal to or less than one-half of absolute inlet pressure), use the following formula:

$$Q = (P_1)(C_g)$$

For pressure drops lower than critical (absolute outlet pressure greater than one-half of absolute inlet pressure), use the following formula:

$$Q = \sqrt{\frac{520}{GT}} C_g P_1 SIN\left(\frac{3417}{C_1}\sqrt{\frac{\Delta P}{P_1}}\right) DEG$$

where,

- Q = gas flow rate, SCFH
- P_1 = absolute inlet pressure, psia (P_1 gauge + 14.7)
- C_g = gas sizing coefficient
- G = specific gravity of the gas
- T = absolute temperature of gas at inlet, °Rankine
- C_1 = flow coefficient ($C_g \div C_v$)
- ΔP = pressure drop across the regulator, psi

Then, if capacity is desired in normal cubic meters per hour (at 0°C and 1.01325 bar), multiply SCFH by 0.0268.

670 Series Panel-Mounted Loading Regulators (Figure 3)

The 670 Series panel-mounted loading regulators are compact, rugged units used primarily for manually loading pressure-balanced gas regulators and providing manual control for diaphragm actuator control valves. Applications include remote control of gas pressure to burners in refineries, power plants, and various process furnaces.

Table 4. 67C Series Flow Capacities

OUTLET PRESSURE RANGE, SPRING PART NUMBER AND COLOR CODE	OUTLET PRESSURE		INLET PRESSURE		CAPACITIES IN SCFH / Nm³/h OF AIR							
					Types 67C, 67CR, 67CS, and 67CSR				Types 67CF, 67CFR, 67CFS, and 67CFSR			
					10% Droop		20% Droop		10% Droop		20% Droop	
	psig	bar	psig	bar	SCFH	Nm³/h	SCFH	Nm³/h	SCFH	Nm³/h	SCFH	Nm³/h
0 to 35 psig / 0 to 2.4 bar T14059T0012 (Silver) T14113T0012 (Silver stripe)	15	1.0	50	3.4	250	6.7	430	11.5	250	6.7	430	11.5
			75	5.2	340	9.1	610	16.3	300	8.0	690	18.5
			100	6.9	430	11.5	800	21.4	330	8.8	1000	26.8
			150	10.3	680	18.2	1200	32.2	400	10.7	1600	42.9
			250	17.2	1300	34.8	1900	50.9	450	12.1	1800	48.2
			400	27.6[1]	390	10.5	1850	50.0	- - - -	- - - -	- - - -	- - - -
	20	1.4	50	3.4	310	8.3	460	12.3	350	9.4	500	13.4
			75	5.2	420	11.3	700	18.8	530	14.2	820	22.0
			100	6.9	620	16.6	940	25.2	750	20.1	1100	29.5
			150	10.3	960	25.7	1450	38.9	1400	37.5	1600	42.9
			250	17.2	1550	41.5	2150	57.6	2550	68.3	2700	72.4
			400	27.6[1]	1200	32.2	2750	73.7	- - - -	- - - -	- - - -	- - - -
	35	2.4	50	3.4	390	10.5	490	13.1	390	10.4	500	13.4
			75	5.2	590	15.8	850	22.8	640	17.2	820	22.0
			100	6.9	770	20.6	1150	30.8	840	22.5	1100	29.5
			150	10.3	1200	32.2	1750	46.9	1450	38.9	1650	42.9
			250	17.2	2200	58.9	2700	72.4	2450	65.7	2700	72.4
			400	27.6[1]	2850	76.4	3450	92.5	- - - -	- - - -	- - - -	- - - -
0 to 60 psig / 0 to 4.1 bar T14058T0012 (Blue stripe) T14114T0012 (Blue)	35	2.4	50	3.4	310	8.3	440	11.8	330	8.8	470	12.6
			75	5.2	440	11.8	670	18.0	500	13.4	730	19.6
			100	6.9	560	15.0	900	24.1	700	18.8	1000	26.8
			150	10.3	780	20.9	1350	36.2	1050	28.1	1550	41.5
			250	17.2	1450	38.9	2200	59.0	2000	53.6	2600	69.7
			400	27.6[1]	770	20.6	2500	67.0	- - - -	- - - -	- - - -	- - - -
	60	4.1	75	5.2	520	13.9	720	19.3	520	13.9	720	19.3
			100	6.9	750	20.1	1050	28.1	770	20.6	1000	26.8
			150	10.3	1100	29.5	1700	45.6	1100	29.5	1600	42.9
			250	17.2	2050	54.9	2850	76.4	2450	65.7	2750	73.7
			400	27.6[1]	3200	85.8	4300	115	- - - -	- - - -	- - - -	- - - -
0 to 125 psig / 0 to 8.6 bar T14060T0012 (Red stripe) T14115T0012 (Red)	80	5.5	100	6.9	500	13.4	800	21.4	530	14.2	780	20.9
			150	10.3	750	20.1	1200	32.2	780	20.9	1200	32.2
			250	17.2	1200	32.2	2050	54.9	1250	33.5	2200	59.0
			400	27.6[1]	910	24.4	3700	99.2	- - - -	- - - -	- - - -	- - - -
	125	8.6	150	10.3	900	24.1	1250	33.5	900	24.1	1150	30.8
			250	17.2	1560	41.8	2450	65.7	1650	44.2	2450	65.7
			400	27.6[1]	2200	59.0	4350	117	- - - -	- - - -	- - - -	- - - -
0 to 150 psig / 0 to 10.3 bar[2] 10C1730X012 (Black)	80	5.5	250	17.2	550	14.7	1200	32.2	550	14.7	1200	32.2
			400	27.6[1]	400	10.7	1100	29.5	- - - -	- - - -	- - - -	- - - -
	135	9.3	250	17.2	970	26.0	1800	48.2	1100	29.5	1800	48.2
			400	27.6[1]	840	22.5	2350	63.0	- - - -	- - - -	- - - -	- - - -
	150	10.3	250	17.2	1100	29.5	1850	49.6	1100	29.5	1850	49.6
			400	27.6[1]	940	25.2	2500	67.0	- - - -	- - - -	- - - -	- - - -

1 Inlet pressures above 250 psig / 17.2 bar with a maximum of 400 psig / 27.6 bar are only available on Types 67CS and 67CSR
2 Available for Types 67CS, 67CSR, 67CFS, and 67CFSR only

Three basic panels are available within the product line, each having one 67C Series pressure regulator connected to one or two gauges and a changeover valve.

A single gauge typically shows loading pressure to the control valve. For more information, see Bulletin 62.3:670.

NACE Universal Compliance

Optional materials are available for applications handling sour gases. These constructions comply with the recommendations of NACE International sour service standards.

The manufacturing processes and materials used by Emerson assure that all products specified for sour gas service comply with the chemical, physical, and metallurgical requirements of NACE MR0175 and/or NACE MR0103. Customers have the responsibility to specify correct materials. Environmental limitations may apply and shall be determined by the user.

Ordering Information

When ordering, complete the Ordering Guide on pages 11 and 12. Refer to the Specifications section on page 2. Review the description to the right of each specification and the information in each referenced table or figure. Specify your choice whenever a selection is offered.

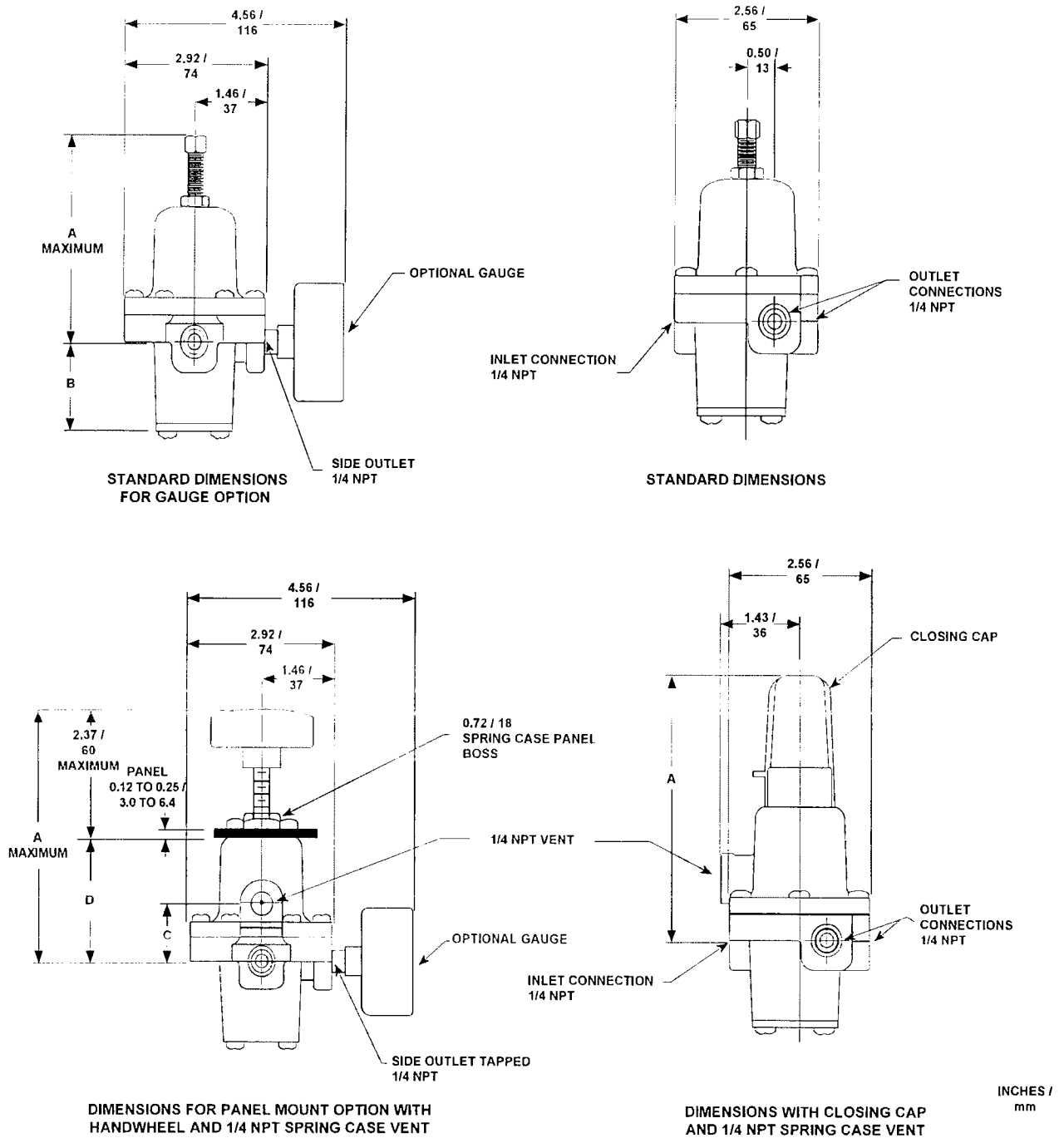

Figure 5. Types 67C, 67CR, 67CS, and 67CSR Dimensions

Table 5. Types 67C, 67CR, 67CS and 67CSR Dimensions

TYPE	STANDARD DIMENSIONS				DIMENSION WITH CLOSING CAP		PANEL MOUNT OPTION WITH HANDWHEEL DIMENSIONS					
	A		B		A		A		C		D	
	Inches	mm	Inches	mm	Inches	mm	Inches	mm	Inches	mm	Inches	mm
67C and 67CR	3.50	89	1.51	38	4.60	117	4.69	119	1.08	27	2.33	59
67CS and 67CSR	4.13	105	1.62	41	4.93	125	5.00	127	1.14	29	2.65	67

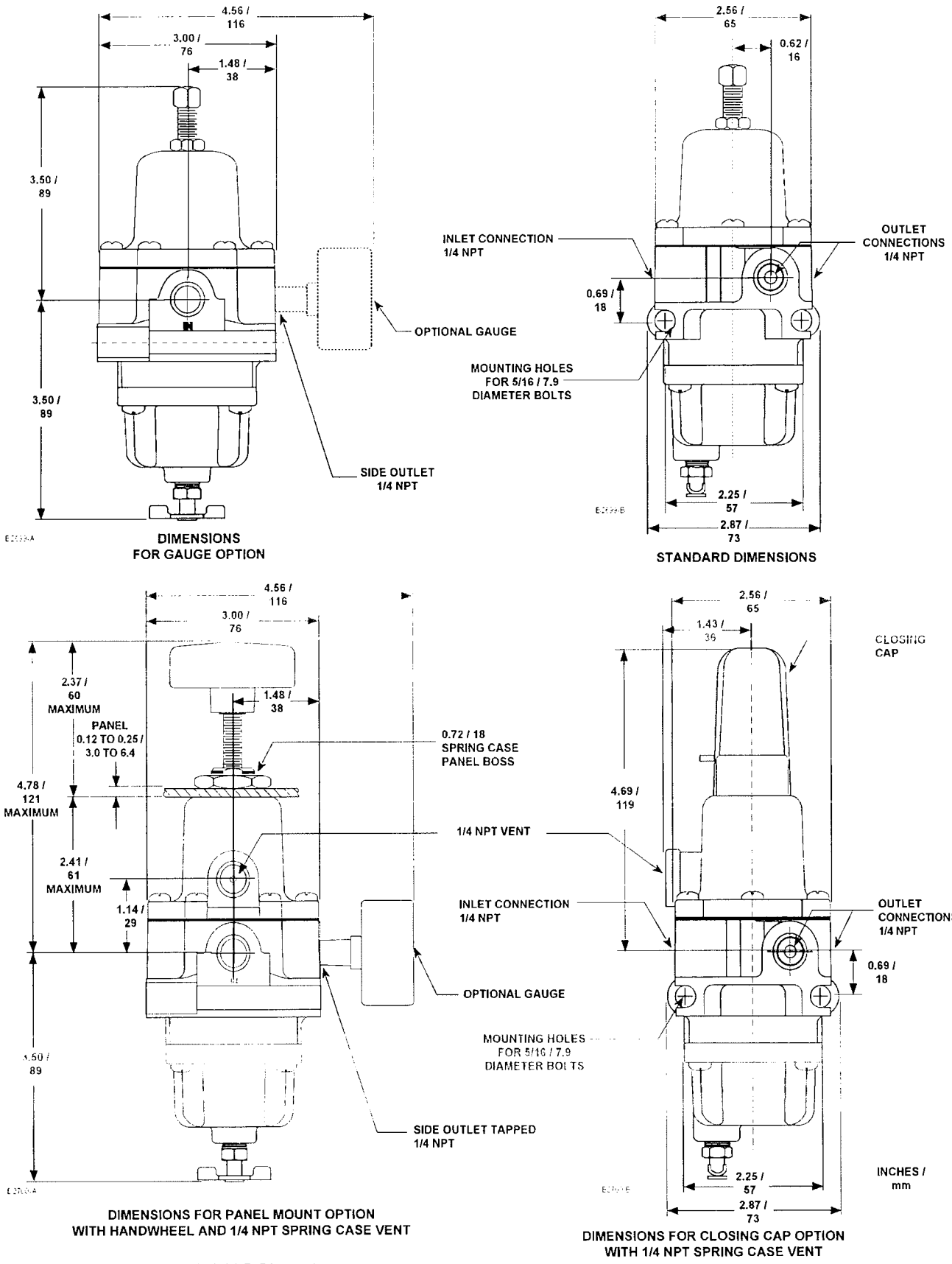

Figure 6. *Types 67CF and 67CFR Dimensions*

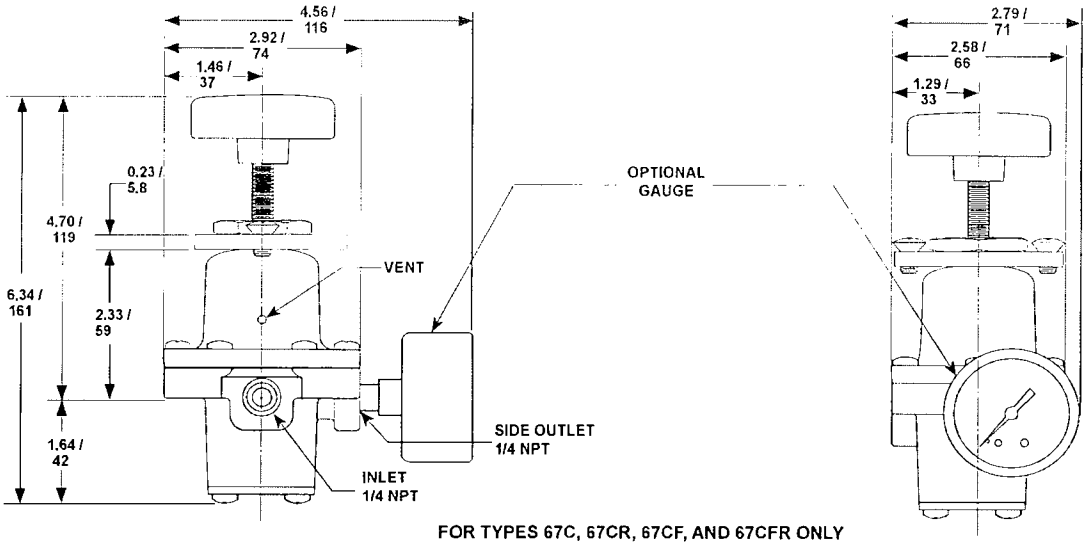

Figure 7. *Dimensions for 3-Hole Panel Mount Option With Handwheel and 1/4 NPT Spring Case Vent*

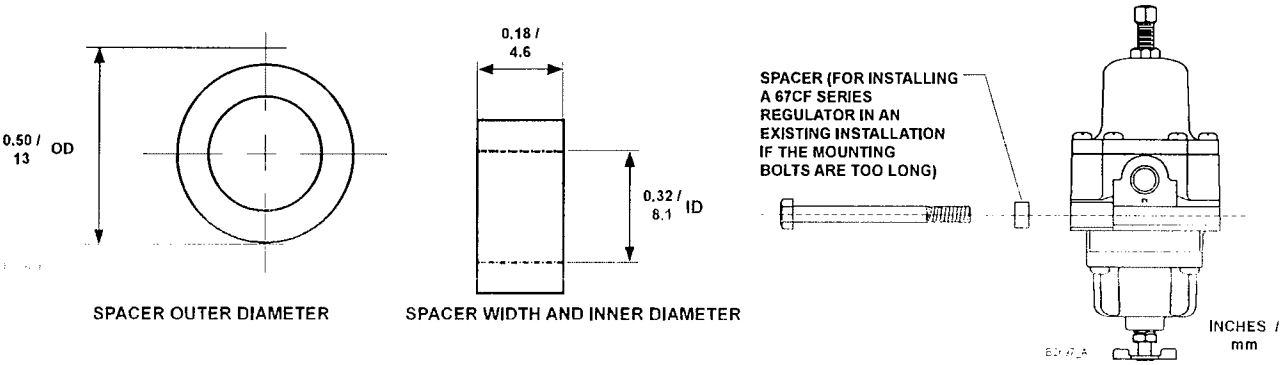

Figure 8. *Spacer Dimensions and Installation Schematic*

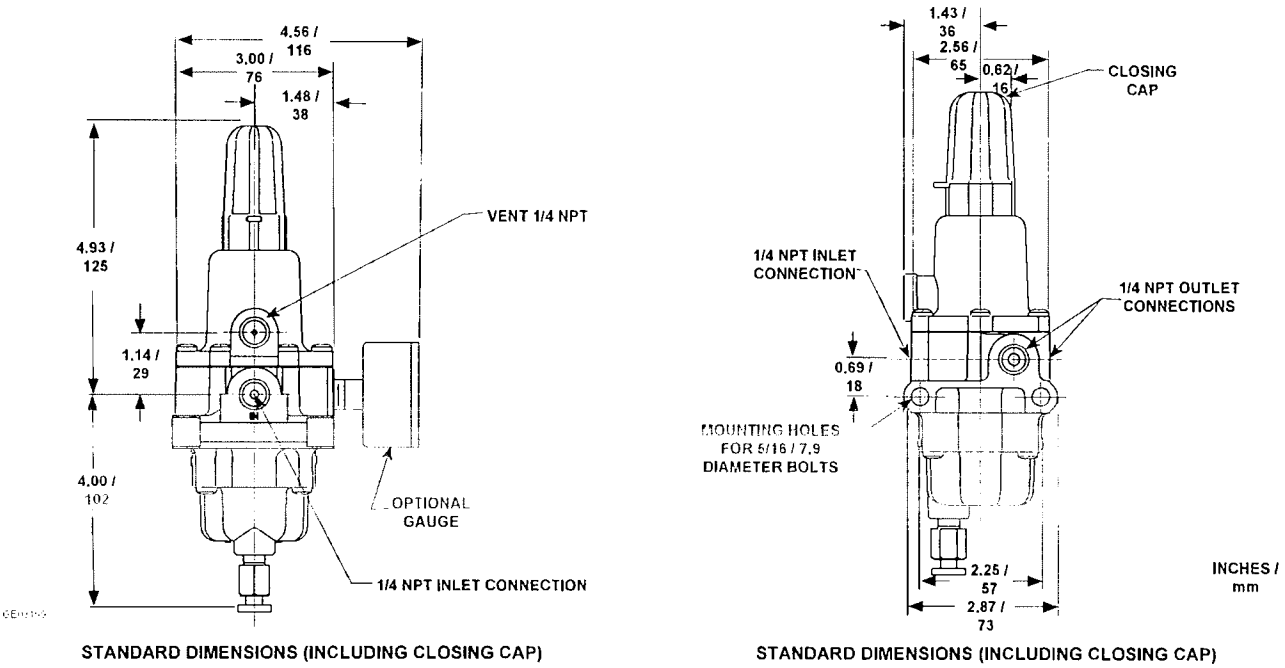

Figure 9. *Types 67CFS and 67CFSR Dimensions*

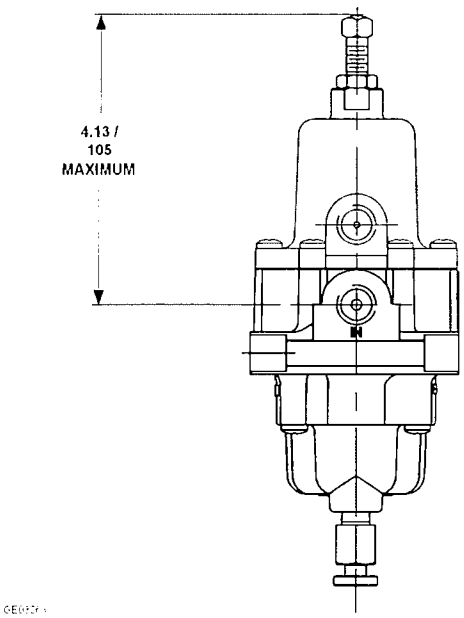

DIMENSIONS WITHOUT CLOSING CAP

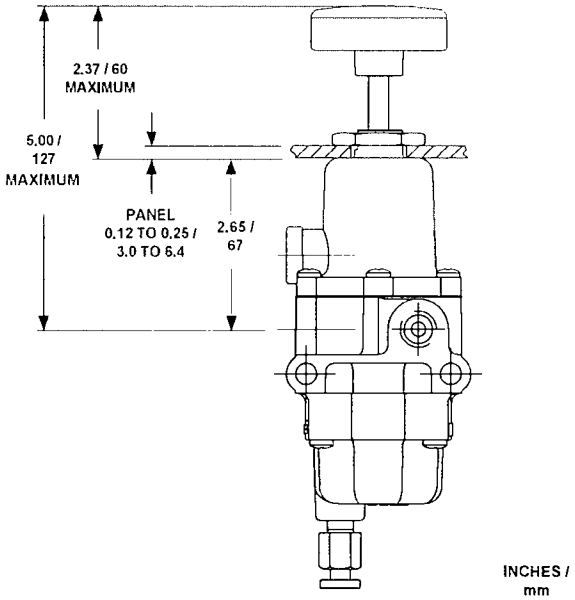

DIMENSIONS FOR PANEL MOUNT OPTION WITH HANDWHEEL

Figure 9. Types 67CFS and 67CFSR Dimensions (continued)

Ordering Guide

Type (Select One)
- ☐ 67C (Aluminum without internal relief)***
- ☐ 67CR (Aluminum with internal relief)***
- ☐ 67CS (Stainless steel without internal relief)***
- ☐ 67CSR (Stainless steel with internal relief)***
- ☐ 67CF (Aluminum with filter and without internal relief)***
- ☐ 67CFR (Aluminum with filter and internal relief)***
- ☐ 67CFS (Stainless steel with filter and without internal relief)***
- ☐ 67CFSR (Stainless steel with filter and internal relief)***

Quantity (Specify) _____

Spring Case Style (Select One)
- ☐ Drilled hole vent (Types 67C, 67CR, 67CF, and 67CFR **standard**)***
- ☐ 1/4 NPT vent (Types 67CS, 67CSR, 67CFS, and 67CFSR **standard**)***
- ☐ Single hole panel mount***
- ☐ 3-hole panel mount (Types 67C, 67CR, 67CF, and 67CFR only)***

Adjusting Screw (Select One)
- ☐ Square head (Types 67C, 67CR, 67CF, and 67CFR **standard**)***
- ☐ Square head with closing cap (Types 67CS, 67CSR, 67CFS, and 67CFSR **standard**)***
- ☐ Handwheel***

Outlet Pressure Range (Select One)
- ☐ 0 to 20 psig / 0 to 1.4 bar***
- ☐ 0 to 35 psig / 0 to 2.4 bar***
- ☐ 0 to 60 psig / 0 to 4.1 bar***
- ☐ 0 to 125 psig / 0 to 8.6 bar***
- ☐ 0 to 150 psig / 0 to 10.3 bar (Types 67CS, 67CSR, 67CFS, and 67CFSR only)***

Diaphragm, O-Rings, and Valve Plug (Select One)
- ☐ Nitrile (NBR) **(standard)***
- ☐ Fluorocarbon (FKM)**
- ☐ Silicone (VMQ) diaphragm, O-rings, and Nitrile (NBR) valve plug*

Filter Material (Select One)
- ☐ Polyethylene (5 microns) **(standard)***
- ☐ Glass (5 microns)***
- ☐ PVDF (Plastic) (40 microns)***
- ☐ Stainless steel (40 microns)***

Dripwell
- ☐ **Standard**
- ☐ Large capacity with manual drain valve
- ☐ Large capacity with automatic drain valve, Nitrile (NBR)
- ☐ Large capacity with automatic drain valve, Fluorocarbon (FKM)

Drain Valve (for Manual Drain Only) (Select One)
- ☐ Brass (Types 67CF and 67CFR **standard**)***
- ☐ Stainless steel (Types 67CFS and 67CFSR **standard**)***

Drain Valve Location (for Standard Dripwell Only) (Select One)
- ☐ Position 1 - Aligned with inlet **(standard)***
- ☐ Position 2
- ☐ Position 3
- ☐ Position 4

Spring Case Vent Location (Select One)
- ☐ Position 1 - Aligned with inlet **(standard)***
- ☐ Position 2
- ☐ Position 3
- ☐ Position 4

Fixed Bleed for Type 67CR, 67CSR, 67CFR, or 67CFSR (Optional)
- ☐ Yes**

Ordering Guide (continued)

Smart Bleed™ Internal Check Valve Airset for Types 67CFR and 67CFSR (Optional)
☐ Yes**

Second Outlet (Select One)
☐ Open (Types 67C, 67CR, 67CF, and 67CFR **standard**)***
☐ Plugged with pipe plug (Types 67CS, 67CSR, 67CFS, and 67CFSR **standard**)***
☐ Tire Valve***
☐ Pressure Gauge (see below)

Triple Scale Pressure Gauge (Optional)
☐ **Brass Gauge** or ☐ **Stainless Steel Gauge**
☐ 0 to 30 psig / 0 to 0.2 MPa / 0 to 2.1 bar***
☐ 0 to 60 psig / 0 to 0.4 MPa / 0 to 4.1 bar***
☐ 0 to 160 psig / 0 to 1.1 MPa / 0 to 11.0 bar***

NACE MR0175 Construction (Optional)(1)
☐ Yes (not available with gauge)**

1 Product complies with the material requirements of NACE MR0175 Environmental limits may apply

Regulators Quick Order Guide	
* * *	Readily Available for Shipment
* *	Allow Additional Time for Shipment
*	Special Order, Constructed from Non-Stocked Parts Consult your local Sales Office for Availability

Availability of the product being ordered is determined by the component with the longest shipping time for the requested construction

NACE MR0103 Construction (Optional)
☐ Yes (not available with gauge)**

Replacement Parts Kit (Optional)
☐ Yes, send one replacement parts kit to match this order.

Specification Worksheet

Application (Please designate units):
Specific Use _____
Line Size _____
Gas Type and Specific Gravity _____
Gas Temperature _____
Does the Application Require Overpressure Protection?
☐ Yes ☐ No If yes, which is preferred:
☐ Relief Valve ☐ Monitor Regulator
☐ Shutoff Device
Is overpressure protection equipment selection assistance desired? _____

Pressure (Please designate units):
Maximum Inlet Pressure (P_{1max}) _____
Minimum Inlet Pressure (P_{1min}) _____
Downstream Pressure Setting(s) (P_2) _____
Maximum Flow (Q_{max}) _____

Performance Required: _____
Accuracy Requirements? _____
Need for Extremely Fast Response? _____

Other Requirements: _____

Industrial Regulators

Emerson Process Management
Regulator Technologies, Inc.

USA - Headquarters
McKinney, Texas 75069-1872, USA
Tel: +1 800 558 5853
Outside U.S. +1 972 548 3574

Asia-Pacific
Shanghai 201206, China
Tel: +86 21 2892 9000

Europe
Bologna 40013, Italy
Tel: +39 051 419 0611

Middle East and Africa
Dubai, United Arab Emirates
Tel: +971 4811 8100

Natural Gas Technologies

Emerson Process Management
Regulator Technologies, Inc.

USA - Headquarters
McKinney, Texas 75069-1872, USA
Tel: +1 800 558 5853
Outside U.S. +1 972 548 3574

Asia-Pacific
Singapore 128461, Singapore
Tel: +65 6770 8337

Europe
Bologna 40013, Italy
Tel: +39 051 419 0611
Chartres 28008, France
Tel: +33 2 37 33 47 00

TESCOM

Emerson Process Management
Tescom Corporation

USA - Headquarters
Elk River, Minnesota 55330-2445, USA
Tels: +1 763 241 3238
+1 800 447 1250

Europe
Selmsdorf 23923, Germany
Tel: +49 38823 31 287

Asia-Pacific
Shanghai 201206, China
Tel: +86 21 2892 9499

For further information visit www.fisherregulators.com

The Emerson logo is a trademark and service mark of Emerson Electric Co. All other marks are the property of their respective owners. Fisher is a mark owned by Fisher Controls International LLC, a business of Emerson Process Management.

The contents of this publication are presented for informational purposes only, and while every effort has been made to ensure their accuracy, they are not to be construed as warranties or guarantees, express or implied, regarding the products or services described herein or their use or applicability. We reserve the right to modify or improve the designs or specifications of such products at any time without notice.

Emerson Process Management Regulator Technologies, Inc. does not assume responsibility for the selection, use or maintenance of any product. Responsibility for proper selection, use and maintenance of any Emerson Process Management Regulator Technologies, Inc. product remains solely with the purchaser.

EMERSON

©Emerson Process Management Regulator Technologies, Inc., 2001, 2013, All Rights Reserved

MANUFACTURER: TIANJIN PIPE (GROUP) CORPORATION
ADD: JINTANG ROAD DONGLI DISTRICT, TIANJIN, CHINA
TEL: 86-22-24801073
FAX: 86-22-24801291

QUALITY CERTIFICATE

QR-11-8.2.4-19

Licence No.:

No.: 14082014

1	Contract No.	TPCO-14324E	L/C No.		O.D.×W.T.	3 SCH160(88.90mm*11.13mm)	Packing	IN BUNDLES
	Order	Comco Pipe and Supply Company	Product	SEAMLESS STEEL LINE PIPE	Steel grade	B/Gr.B	Total pieces	125
	P.O. No.	E1-5130 (TC8389-A)	Port of desti.		Man. Method	HOT ROLLING SEAMLESS	Total metres	
	Standard	ASTM A106 -2011/ASME SA106 -2013/API SPEC 5L 45th			Length range	12.40-13.00	Total Tons	34.508

	Heat No.	Lot No.	Quantity				Delivery condition	Sample No.	Tensile test(MPa)							Impact test(J)									
			Pieces	Meters	Bundles	Tons			1*	Tem. ℃	T.S.	Type	Y.S.	Elong. %	Shrink %	2*	Tem. ℃	Size	AK1	Shear %	AK2	Shear %	AK3	Shear %	AVE	Shear %
2	145045	71	125			34.508	As rolled	71-07-0714		25	500✓	Rt0.5	360✓	39✓												
	Total		125			34.508		Note:	strip,L,bo=19.0 mm Lo=50mm																	

This Material Conforms to ASME Section II Edition 2013
Initialed By:
Date: JAN 07/2015

	Heat No.	Lot No.	Sample No.	HV10	Hardness test (inside)					Hardness test (middle)					Hardness test (outside)					NDE	Bend test	Fla. test(1)	Fla. test(2)
					1	2	3	4	AVE	1	2	3	4	AVE	1	2	3	4	AVE				
3	145045	71	71-07-0714		180.0	179.0	177.0	176.0	178.0	179.0	177.0	175.0	174.0	176.0	160.0	159.0	158.0	156.0	158.0	ET+UT/Φ2.2+L3		G	G

	Heat No.		Chemical composition % (L: Ladle analysis P:Product analysis)																				Hydro. Test
	Steel speci.		C	Si	Mn	P	S	Ni	Cr	Mo	Cu	Al	V	Nb	Ti	B	Ca	N	H	O	CE(PCM)	CE(IIW)	
4	145045	L	0.14✓	0.22✓	1.050✓	0.006✓	0.004✓	0.03	0.06✓	0.03✓	0.05✓	0.032✓	0.03✓	<0.01	<0.01	<0.0005	0.0017					0.34	2470PSI/8s
	14Mn5V	P	0.15	0.21	1.070	0.007	0.004	0.03	0.05	0.03	0.05	0.034	0.04	0.01	<0.01	<0.0005	0.0019					0.36	
		P	0.14	0.22	1.070	0.007	0.004	0.03	0.05	0.04	0.05	0.035	0.04	0.01	<0.01	<0.0005	0.0019					0.35	
		L																					
		P																					
		P																					
		L																					
		P																					
		P																					

	NDE (100%)	Visual and Dimension	Hydro. Test	Pipe End NDE	Pipe End Bevelling	Residual Mag. Test	SSC	HIC
5	G	G	G	G	G	G		

We hereby state that all pipes are manufactured and inspected according to above standards and order.

Seal for certification:

Note: EN10204-3.1: NACE MR 0175 (2009) / NACE MR 0103(2010) /ISO 15156-2A (2009) ,ALUMINUM KILLED STEEL. EAF-LF-CONTINUOUS CASTING. Visual inspection and Dimensional inspection ,EN10204-3.1

No.

Page (1)

Date: 2014-8-28

Remark:desti.=destination;Tem.=Temperature;speci.= specification;Man.=Manufacture;Fla.=Flattening;G=Good;Hydro.=Hydrostatic; Mag=Magnetic

(FOR EXPORT ONLY)

Order#: 402332 Seq: 1 PO#: 14-561-01/02/03-02 Heat#: 145045 Mill: TPCO
Part#: P 3 160 S6 D BT Part Desc: Pipe 3 (88.9mm O.D.) SCH 160 SMLS A/SA106-B DRL BEVELED (TPCO)

thickness = 0.419"

3" SCH160 SA106B Pipe
HT # 145045
14-561

SAN ENG STEEL FORGING CO LTD
311, Jen Hsin Road, Jen Wu District
Kaohsiung, Taiwan, R.O.C.
TEL:07-3724249 ; FAX:07-3712923
URL: www.saneng.com.tw
e-mail: saneng@ksts.seed.net.tw

MILL TEST CERTIFICATE

EN10204-3.1.B(DIN50049/3.1.B)

Customer: SEYBOLD INTERNATIONAL CORP.
Order No.: 7007687(3)-CEF/NOV

Certificate No.: SE7687C1
Date: 12/02/2013

PRODUCT	MATERIAL SPECIFICATIONS	DIMENSIONAL SPECIFICATIONS
FORGED CARBON STEEL FLANGES	ASTM A105-13/ASME SA-105-13	ASME B16.5-13 CSA Z245.12

Item No.	CODE NO	DESCRIPTION	QUANTITY	CHEMICAL COMPOSITION (%)													
				C	Si	Mn	P	S	Cu	Cr	Ni	Mo	V	Nb	N		CE(*3)
			Min	-	0.100	0.600	-	-	-	-	-	-	-	-	-		
			Max	0.350	0.350	1.050	0.035	0.040	0.400	0.300	0.400	0.120	0.080	0.020	-		
41	1074301	600 WNRF XS 4" A105N	433 PCE	0.200	0.210	1.020	0.013	0.005	0.110	0.090	0.060	0.010	0.003	0.001	0.007		0.402
42	1074301	600 WNRF XS 4" A105N	217 PCE	0.190	0.200	1.020	0.012	0.005	0.120	0.090	0.050	0.010	0.003	0.001	0.008		0.392
43	1454186	600 WNRF S80 12" A105N	10 PCE	0.200	0.230	1.120	0.012	0.002	0.080	0.120	0.120	0.020	0.004	0.001	0.006		0.429
44	1068728	600 WNRF XS 2" A105N	900 PCE	0.210	0.220	1.150	0.021	0.005	0.007	0.020	0.010	0.002	0.006	0.001	0.007		0.408
45	1075223	600 WNRF XS 3" A105N	100 PCE	0.190	0.210	1.070	0.017	0.004	0.210	0.080	0.060	0.014	0.001	0.002	0.007		0.405
46	1069131	600 WNRF S160 2" A105N	400 PCE	0.210	0.220	1.150	0.021	0.005	0.007	0.020	0.010	0.002	0.006	0.001	0.007		0.408
47	1074298	600 WNRF S160 4" A105N	15 PCE	0.210	0.220	1.160	0.016	0.004	0.007	0.010	0.010	0.003	0.006	0.001	0.007		0.408
48	1074757	1500 WNRTJ XS 3" A105N	150 PCE	0.190	0.180	1.070	0.016	0.004	0.140	0.080	0.050	0.015	0.009	0.001	0.010		0.402
49	1074677	1500 WNRTJ S160 3" A105N	175 PCE	0.230	0.190	1.120	0.018	0.007	0.006	0.020	0.010	0.002	0.004	0.001	0.007		0.423
50	1074802	1500 WNRTJ S160 4" A105N	30 PCE.	0.220	0.200	1.150	0.024	0.009	0.007	0.020	0.010	0.003	0.004	0.001	0.007		0.418

Item No.	Heat No.	T.S.(*1) (MPA)	Y.S.(*1) (MPA)	E.L.(*1) (%)	Hardness (HB)	R.A.(*1) (%)	Impact Test Temp: Minimum: Joule			Material Supplier	HEAT TREATMENT(*2)
							1	2	3		☒ N
	Min	485.0	250.0	22.0	-	30.0					REMARKS
	Max	-	-	-	187	-					
41	C10753	520.0	376.0	36.8	153/151	70.4				SEAH BESTEEL	880°CX4HRS
42	C10754	512.0	364.0	34.0	152/150	69.5				SEAH BESTEEL	CONFORMS WITH NACE MR0103-12 AND NACE MR0175/ISO15156.2-09 CLAUSE 7.2.1.4 REGION 3 AND ANNEX A.
43	652897	531.0	374.0	34.6	154/152	71.3				GODO STEEL	
44	4723460	522.0	358.0	34.2	153/151	69.5				ACOMINAS	CONFORMS WITH Z245.12 CAT I GR248 SOUR SERVICE-09(FOR USE AS WELDING NECK AND BLIND FLANGES ONLY)
45	95738	525.0	376.0	35.0	153/150	71.3				WEI CHIH STEEL	
46	4723460	522.0	358.0	34.2	153/151	69.5				ACOMINAS	MN TO C RATIO IS GREATER THAN 3.0"
47	4677171	518.0	350.0	35.8	153/151	70.4				ACOMINAS	
48	94409	520.0	372.0	36.4	153/150	70.4				WEI CHIH STEEL	
49	4573180	527.0	366.0	35.6	154/151	72.1				ACOMINAS	
50	4510862	535.4	389.3	33.8	153/151	70.4				ACOMINAS	

*1: T.S. = Tensile Strength, Y.S.=Yield Strength, E.L.=Elongation, R.A.=Reduction of Area.

*2: N=Normalized, A=Annealed, Q=Quenched, T=Tempered, S.T=Solution Treated, S.R=Stress Relieved, A.C=Air Cooled, F.C=Furance Cooled, W.C=Water Cooled, O.C=Oil Cooled.

*3: C.E. Value = C + (Mn /6) + (Cr + Mo +V) / 5 + (Ni + Cu) / 15

We hereby certify that the material has been tested in accordance with the above specification and also with the requirements called for by the above order.

SAN ENG STEEL FORGING CO., LTD. QUALITY ASSURANCE DEP'T

Manager of Quality Assurance Dep't

This Material Conforms to
ASME Section II Edition 2013
Initialed By:
Date: JAN 14/2015

3" 1500# S160 RTJ WN FLANGE
HT # 4573180
14-561/SE#-01
-01

This Material Conforms to
ASME Section II Edition 2013
Initialed By: ⓒ
Date: Jan 13/2015

3" S160 180 EB SA234 WPB
PO-14-561-01
HT # 14E00057

INSPECTION CERTIFICATE

TO EN10204 3.1/ISO 10474 3.1B

Thai Benkan Co., Ltd.
58 Soi Watkrunai, Bangkru, Prapadaeng,
Samutprakarn, 10130 Thailand.

Purchaser : CCTF CORPORATION

E-No.	Purchase Order No.	Job No.	D M Y	Certificate No.
MD-542	4895520-00		30/08/2014	T- 2014200647

No.		MFG. No.	Specification for Material Made from Seamless Pipe ASTM A234-13/ASME SA234-13 Gr.WPB CSA Z245.11-13 Gr.241 CAT 1 SS NACE MR0175/ISO 15156-2:08&MR0103-12	Specification for Inspection ASME B16.9-2007,B16.25-2007		Visual Examination Good	Dimensional Inspection Good
			Product & Size (T:*1)	Quantity	Heat Treatment (Note 1)	Hardness Actual Data	Item No.
1		14H00025	90 EL WPB 12 XS	30	A	HB : 120 - 150	7514867
2		13G00063	90 EL WPB 2 1/2 S160	10	A	HB : 118 - 145	7510270
3		14E00057	180 EL WPB 3 S160	14/20	A	HB : 115 - 145	7515340
4		14G20006	RC WPB 1 X 3/4 S80	10	N	HB : 120 - 135	7510144
5		14E20021	RC WPB 2 X 1 1/2 S80	15/40	N	HB : 120 - 150	7513917

Specification		Chemical Composition %												Tension Test *2			
		C	Si	Mn	P	S	Cu	Ni	Cr	Mo	V	Nb	C.E.	YS	TS	E	
Min.		x 100	x 100	x 100	x 1000	x 1000	x 100	x 100	x 100	x 100	x 1000	x 1000	x 100	MPa.		%	HARDNESS MAX
Max.			10	29										240	415	30	197 HBW : GOOD
Base Material Heat No.		30		106	50	58	40	40	40	15	80	20			655		
1	2-91139	19	24	82	14	4	1	1	2	<1	1	2	33	344	493	44	
2	J3L2833	19	19	84	16	8	2	2	4	1	0	0	34	308	486	64	
3	J3K6493	21 ✓	20 ✓	83 ✓	19 ✓	7 ✓	2 ✓	2 ✓	5 ✓	10 ✓	0 ✓	0	38	309 ✓	495 ✓	61 ✓	
4	J3LB320	20	19	73	16	6	2	2	5	1	0	1	34	329	471	55	
5	780937	16	20	77	16	2	16	8	1	2	0	0	31	359	500	31	

(Note 1) A : Hot formed with final temperature between 620 °C-980°C, Air Cooling N : Normalizing 910°Cx0.5 HR. Air Cooling

The fittings was manufactured,sampled,tested,and inspected in accordance with the specification, and was found to meet the requirements

C.E. = C+Mn/6+(Cr+Mo+V)/5+(Ni+Cu)/15 MAGNETIC PARTICLE EXAMINATION FOR TEE ONLY :

* 1 : "T" symbolized wall thickness in mm. * 2 : YS Yield strength TS = Tensile strength E = Elongation

We hereby certify that the product described herein has been manufactured in accordance with the specifications concerned and also with the purchaser's requirements and that the test results shown herein are correct.

Note for [illegible] For each reduction of 0.01% below the specified carbon maximum, an increase of 0.06% manganese above the specifi[illegible]imum will be permitted, up to a maximum of 1.35%

Rungnapa Kampiranon
Quality Assurance Manager
Thai Benkan Co., Ltd.

8" channel
Name plate bracket

Vendor
NUCOR CORP. (PLYMOUTH)

Heat Number
PL14107692

NUCOR
NUCOR CORPORATION
NUCOR STEEL UTAH

Mill Certification
12/1/2014

MTR #: 0000059585
PO Box 100
7285 West 21200 North
PLYMOUTH, UT 84330
(435) 458-2300
Fax: (435) 458-2309

Sold To: VARSTEEL LTD.-NI/RD
602 13TH AVE
NISKU AB T9E 7P6
CANADA

Ship To: VARSTEEL LTD.-RED DEER
282-28042 HWY 11 BURNTLAKE IND
RED DEER AB T4S 2L4
CANADA
(403) 320-1953
Fax: (780) 955-1901

Customer P.O.	RD-984686	Sales Order	229717.1
Product Group	Merchant Bar Quality	Part Number	2508011524010W0
Grade	NUCOR MULTIGRADE	Lot #	PL1410769201
Size	8x11.5# Channel	Heat #	PL14107692
Product	8x11.5# Channel 20' NUCOR MULTIGRADE	B.L. Number	U1-488875
Description	NUCOR MULTIGRADE	Load Number	U1-301086
Customer Spec		Customer Part #	

I hereby certify that the material described herein has been manufactured in accordance with the specifications and standards listed above and that it satisfies those requirements.

Roll Date: 10/20/2014 Melt Date: 10/16/2014 Qty Shipped LBS: 7,360 Qty Shipped Pcs: 32

C	Mn	P	S	Si	Cu	Ni	Cr	Mo	V	Cb	Sn
0.17%	0.68%	0.015%	0.049%	0.20%	0.30%	0.12%	0.21%	0.026%	0.0174%	0.000%	0.021%

Ti	CE4020	CEA529
0.001%	0.36%	0.40%

CE4020: C. E. CSA G4020, AASHTO M270
CEA529: A529 CARBON EQUIVALENT

Yield 1: 54,878psi
Yield 2: 53,752psi
Tensile 1: 76,753psi
Tensile 2: 76,065psi
Elongation: 33% in 8"(% in 203.3mm)
Elongation 33% in 8"(% in 203.3mm)

Specification Comments: NUCOR MULTIGRADE MEETS THE REQUIREMENTS OF: ASTM A36/A36M-12, A529/A529M-05 GR50, A572/A572M-12A GR50, A709/A709M-13 GR36/50 NO CVN, CSA G40.21-13 GR44W(300W)/GR50W(350W), AASHTO M270/M270M-10 GR36/GR50, ASME SA36/SA36M-13

Comments: NUCOR - PLYMOUTH IS AN I.S.O. 9001 AND AN A.B.S. CERTIFIED MILL
CMTR COMPLIES WITH DIN EN 10204 - 3.1

ALL MANUFACTURING PROCESSES OF THE STEEL MATERIALS IN THIS PRODUCT, INCLUDING MELTING, HAVE OCCURRED WITHIN THE UNITED STATES. ALL PRODUCTS PRODUCED ARE WELD FREE. MERCURY, IN ANY FORM, HAS NOT BEEN USED IN THE PRODUCTION OR TESTING OF THIS MATERIAL.

This Material Conforms to
ASME Section II Edition 2013
Initialed By: CA
Date: Dec 18/2014

Cory Anthony
Division Metallurgist

3/4" 3M Coupling SA105N
HT# 6807
PO-14-561-01-15

CERTIFIED MILL TEST REPORT

The Best Value - *Price, Quality, Service* All The Time.

LOG NO. F00000000067235

BONNEY FORGE CORPORATION
P.O. BOX 330 • 14496 CROGHAN PIKE • MOUNT UNION, PA 17066-0330
(814) 542-2545 • (800) 345-7546 • FAX (814) 542-4906
www.bonneyforge.com

CUSTOMER: NOV WILSON CANADA ULC (N) **DATE** 12/18/2014

CUSTOMER ORDER NO.: 25387150 **BONNEY ORDER NO.** B000179299

SHIP TO: NOV WILSON CANADA ULC (N)
(EDMONTON)
2603 - 76 AVENUE
EDMONTON AB T6P 1P6
Canada

ITEM	QUANTITY	LOT NO.	GRADE OR SPECIFICATION NO. CHEMICAL ANALYSIS, PHYSICAL PROPERTIES, REMARKS:
140	400	6807	3/4 3M A105N COUP T SA/A105N 3902.
			Al 0.029 C 0.200 Co 0.002 Cr 0.070 Cu 0.030 Mn 1.030 Mo 0.006 N 0.004
			Nb 0.012 Ni 0.020 P 0.006 S 0.016 Si 0.200 V 0.004
			CE(Long Formula) = 0.39
			T/S(PSI) 75,092 Y/S(PSI) 52,064 EL(%) 34.45 RA(%) 57.65
			Brinell 132 BHN 135 BHN
160	41	6775 MALE	3/4 3000 A105N UNAR T SA/A105N 5607
			Al 0.027 C 0.210 Cb 0.000 Co 0.004 Cr 0.040 Cu 0.050 Mn 1.020 Mo 0.006
			Nb 0.014 Ni 0.013 P 0.006 S 0.021 Si 0.210 V 0.004
			CE(Long Formula) = 0.39
			T/S(PSI) 71,947 Y/S(PSI) 49,764 EL(%) 36.10 RA(%) 65.60
			Brinell 139 BHN 139 BHN
		6809 FEMALE	3/4 3000 A105N UNAR T SA/A105N
			Al 0.035 C 0.210 Co 0.002 Cr 0.060 Cu 0.030 Mn 1.010 Mo 0.006 N 0.003
			Nb 0.014 Ni 0.020 P 0.004 S 0.015 Si 0.220 V 0.003
			CE(Long Formula) = 0.40
			T/S(PSI) 75,779 Y/S(PSI) 52,207 EL(%) 34.20 RA(%) 59.94
			Brinell 135 BHN 137 BHN
		M1A1 NUT	3/4 3000 A105N UNAR T SA/A105N
			Al 0.031 C 0.200 Co 0.000 Cr 0.140 Cu 0.160 Mn 1.010 Mo 0.030 Nb 0.002
			Ni 0.080 P 0.013 S 0.020 Si 0.230 V 0.003
			CE(Long Formula) = 0.42
			T/S(PSI) 73,761 Y/S(PSI) 49,287 EL(%) 32.15 RA(%) 62.32
			Brinell 132 BHN 132 BHN

This Material Conforms to
ASME Section II Edition 2013
Initialed By: Q
Date: JAN 19/2015

We certify that the data on this sheet is a true copy taken from our records of material furnished us by the production mill, or as obtained by additional laboratory checks.

by Kylee Ruiz
Kylee Ruiz
QUALITY PROCESS MANAGER

CMTR: REV2

3" std 90 deg Elbow SA234 WPB
HT# 13326938
14-56 1-01-01
HT# 13L0938

This Material Conforms to
ASME Section II Edition 2013
Initialed By: ⊙
Date: Jan 15/2015

INSPECTION CERTIFICATE

RIGID INDUSTRIES CO., LTD.

8, MEI-CHUNG RD. NIAO-SONG,
KAOHSIUNG 83301 TAIWAN
TEL: 886-77310527~8
FAX: 006-77315007

PURCHASER : SEYBOLD INT'L CORP.
STANDARD : ASTM A234 WPB-13
ASME SA234 WPB-04
CSA Z245.11-13 Gr.241 CAT I Sour Service
MATERIALS : ASTM A106 Gr.B
INSP. SPEC. : ASME B16.9 -12

DATE: 2014-07-08
ORDER NO: 7008475/3392849-OR-2100
P.I. NO: 14D01-1
CERTIFI. NO: 14G02-1

ACCORDING TO EN10204/DIN50049/3.1

ITEM NO.	PRODUCT & SIZE	QUANTITY PCS	MFG NO.	VISUAL & DIMENTIONAL INSPECTION	HARDNESS MAX. 197 HB	HEAT TREATMENT (NOTE)	MAGNETIC PARTICLE EXAMINATION	
1	ELL 90 LR 1.1/4" STD	130	3C3463(3C)	GOOD	127-140	A		
2	ELL 90 LR 1.1/2" STD	400	2L7929(2L)	GOOD	133-137	A		
3	ELL 90 LR 3" STD	1500	13L0938	GOOD	136-146	A		
4	ELL 90 LR 3" XH	250	14E7610	GOOD	133-143	A		
5	ELL 90 LR 4" STD	83	13K652V	GOOD	134-145	A		
6	ELL 90 LR 4" STD	417	14C5362	GOOD	141-144	A		
7	ELL 90 LR 4" XH	400	14C464V	GOOD	138-146	A		
8	ELL 90 LR 8" XH	35	14C3523	GOOD	132-146	A		
9	ELL 90 LR 8" XH	25	14B1919	GOOD	137-147	A		
10	ELL 90 LR 12" STD	25	14C302V	GOOD	142-150	A		

ITEM NO	MATERIAL CHARGE NO.	CHEMICAL COMPOSITION %											* PHYSICAL TEST				
		C x100	Si x100	Mn x100	P x1000	S x1000	Cu x100	Ni x100	Cr x100	Mo x100	V x100	Nb x1000	Y S KSI	T S KSI	*** E %	**	C.E. X100
	STANDARD MIN.		10	29									35.0	60.0	30.0		
	STANDARD MAX.	30	35	135	50	58	40	40	40	15	8	20		95.0			50
1	110963	20	21	50	14	4	4	2	3	1	1	<1	43.0	70.4	31.8	L	30
2	318629	18	23	56	6	3	5	4	3	2	<1	<1	42.0	65.7	30.1	L	29
3	13326938	19 ✓	24 ✓	56 ✓	8 ✓	4 ✓	2 ✓	2 ✓	6 ✓	2 ✓	<1 ✓	<1	43.1 ✓	67.7 ✓	31.0	L	30
4	318510	18	25	55	6	3	3	2	2	1	<1	<1	43.5	63.9	31.2	L	28
5	1215302V	15	23	86	11	3	5	2	4	1	<1	1	43.0	68.3	30.7	L	31
6	14300362	18	23	56	8	2	2	3	6	2	<1	<1	44.1	67.3	30.2	L	29
7	1315894V	13	28	88	11	7	5	2	6	<1	<1	1	43.0	66.9	31.3	L	29
8	123423	13	24	105	9	2	10	4	3	2	4	<1	44.0	68.4	31.5	L	33
9	323619	19	25	55	7	3	2	2	4	1	<1	<1	43.5	67.7	31.0	L	29
10	1331642V	15	28	99	11	6	9	3	4	<1	<1	1	43.4	68.1	31.3	L	33

(NOTE):A:HOT FORMED WITH FINAL TEMPERATURE BETWEEN 620℃-980℃,AIR COOLING.
N:NORMALIZING AT TEMPERATURE 880℃X0.5HR,AIR COOLING.
NACE MR-01-75-09/ISO15156.2 ,NACE MR 0103-12:SATISFACTORY

WE HEREBY CERTIFY THAT THE PRODUCT DESCRIBED HEREIN HAS BEEN MANUFACTURED IN ACCORDANCE WITH THE SPECIFICATIONS CONCERNED AND ALSO WITH THE PURCHASER'S REQUIREMENTS AND THAT THE TEST RESULTS SHOWN HEREIN ARE CORRECT.

* TYPE OF SPECIMEN:STRIP(WIDTH:1 in./GAUGE LENGTH:2 in.) ** SAMPLING DIRECTION:L=LONGITUDINAL T=TRANSVERSE
*** ACTUAL THICKNESS OF SPECIMEN(t) LESS THAN 5/16" E=48t+15 (L) E=32t+10 (T)

Ou L Lan

MANAGER OF Q.A. DEPT.

3" 150 stand SA105 FLANGE
HT# 9110/14
14-561-01-01

METALFAR PRODOTTI INDUSTRIALI SPA A01
23861 CESANA BRIANZA (LC) - ITALY
VIA G. PARINI, 28
PHONE + 39 031 655441 - FAX +39 031 655149
quality.mff@farmas.com

COMPANY WITH QUALITY SYSTEM CERTIFIED BY DNV = ISO 9001 = = ISO 14001 =

INSPECTION CERTIFICATE EN 10204:2004 / 3.1 A02

Nr A03 2014-C_MFF-02248 Data / Dated 05.05.2014 Z02

DNOW CANADA ULC. A06
1800, 635 - 8TH Avenue S.W.
T2P 3M3 CALGARY, ALBERTA CA

Ordine / PO	3323839-OR-2100 A07
Item	090
Packing List	2014-3E301-0001793
Fattura / Invoice	2014-3E401-0001584
Ns. rif. / Our ref.	2013-3E201-0003223-0087 A08

Dest. DNOW Canada ULC. A05
2603 - 76 Avenue
T6P 1P6 EDMONTON, ALBERTA CA

Cod. colata B07 Heat Code	Nr. colata B07 Heat Nr	Quantità B08 Quantity	Descrizione Description B01 - (B09 - B11)
	9110/14	392,00	W/N 150 RF 3" STD A105N

Mat. in acc. a / Mat. in acc. to B02 ASTM/ASME A 105/SA 105 M - 13 ASME CODE SECT. II, PART A, ED. 2013
NACE MR-0175/2009 ISO 15156 - SOUR SERVICE
NACE MR-0103/2012 - SOUR SERVICE
Q.A.S.IN ACCORD.WITH PRESS.EQUIPM.DIRECT.97/23/EC(PED) ANNEX I,PARAGRAPH 4.3 CERT.MLN 0531016/01
CSA CAN3 Z245.12-09 GRADE 290 CAT.I SOUR SERVICE

Ann. mat. / Mat. remarks B02 FULLY KILLED STEEL AND FINE GRAIN PRACTICED

Elementi / Elements (C71 - C92)	C	Si	Mn	S	P	Cr	Ni	Mo	Ti	Cu	V	Nb	N
LADLE ANALYSIS	0,190	0,190	1,050	0,005	0,010	0,140	0,070	0,021	0,016	0,090	0,004	0,001	0,009

	Al	B %	CE LF	CE SF	F1	F2	PREN
LADLE ANALYSIS	0,025	0,000	0,409	0,365	0,325	0,161	--

CE LF=C+Mn/6+(Cr+Mo+V)/5+(Ni+Cu)/15 CE SF=C+Mn/6) F1=Cu+Ni+Cr+Mo+V F2=Cr+Mo

Provetta Test specimen Sez/Sect mm2	L. mm	Forma Shape C10 1=O - 2=□	°C C03	Snervamento>0,2% Yield Strength>0,2% C11 MPa	Snervamento>1,0% Yield Strength>1,0% C11 MPa	Rottura Tensile C12 MPa	Allungamento Elongation C13 %	Contrazione Reduction of area C15 %
126,60	50,80	1	20	361,0	--	529,0	31,0	66,0

DUREZZA / HARDNESS C22

HBW	Tipo/Type C40	Provetta / Test Specimen	RESILIENZA / IMPACT TEST °C C03	1-Joule C42	2-Joule C42	3-Joule C42	Media/Average C43
150,0 - 152,0	KV	10x10 mm	20	87	82	80	83,0

Tratt. Term. / Heat treatment C70	NORMALIZED AT 920 C - COOLED IN STILL AIR	ELECTRIC FURNACE
Dim in acc. a / Dim. acc. to B14	ASME/ANSI B16.5 -2013 ASME/ANSI B36.10M -2010	
Finitura / Roughness	125/250 MICROINCH AARH	

Marcatura in acc. B06 Marking in acc. to	MSS SP25 Ed. 2013	Vis. & Dim.	SATISFACTORY	Origine Origin of Steel	EUROPEAN UNION

Note / Notes 100% MANUFACTURED IN ITALY
MANUFACTURING IN ACCORDANCE WITH ORDER AND SPECIFICATION

This Material Conforms to
ASME Section II Edition 2013
Initialed By: (W)
Date: Jan 14/2015

UFFICIO CONTROLLO QUALITA' A05 QUALITY CONTROL DEPARTMENT	ENTE UFFICIALE DI COLLAUDO Z03 INSPECTION AUTHORITY	MARCHIO PRODUZIONE A04 MANUFACTURER'S SYMBOL
S. Trigerio		MFF

1" 3M Threaded Tee SA 105N

HT# T0R

I.M.L. - INDUSTRIA MECCANICA LIGURE S.P.A.
Via Giancarlo Farina, 25 - 16030 Casarza Ligure - GE - ITALY
Tel. +39 0185 467661 - Fax +39 0185 466510 - E-mail quality.iml@farinagroup.com
MATERIAL TEST DEPARTMENT

COMPANY WITH QUALITY SYSTEM ISO 9001: 2008 CERTIFIED BY RINA CERT. N°23/91/S

INSPECTION CERTIFICATE EN 10204:2004 / 3.1

Nr 25062 Dated 19.03.2014

DNOW CANADA ULC

1800, 635-8th Avenue S.W.
Calgary, Alberta, Canada T2P 3M3 CA

Purchase Order Nr 3376093-OR-2100
Item Nr 40
Packing List Nr 327
Invoice Nr 272

Heat Code	Heat Nr	Quantity	Description
T0R	12/73536	1.250,00	FITTING TEE THRD NPT 3M 1" A105N

Element	C	Si	Mn	S	P	Cr	Ni	Mo	Ti	Cu
ASTM A105 (LADLE)	0,200	0,170	0,940	0,010	0,013	0,110	0,060	0,010	0,019	0,170

Element	V	Nb	N	AL	C.E.	PRE
ASTM A105 (LADLE)	0,002	0,003	--	0,026	0,396	--

Test specimen Sect. mm2	Test specimen Length mm	Shape 1=O - 2=□	Tensile N/mm2	Yield Strength > 0,2% N/mm2	Yield Strength >1% N/mm2	Elongation %	Reduction of area %
122,65	50,00	1	524,0	326,0	--	32,0	57,0

HARDNESS HBW	TYPE	IMPACT TEST Test specimen	°C	1-Joule	2-Joule	3-Joule
156,0 - 162,0		10x10mm	-10	68	71	70

Heat treatment	Normalized at 880°-920°C / Air Cool	ELECTRIC FURNACE
Dimension in accordance	ASME B16.11 Ed.2011 - ANSI/ASME B1.20.1 Ed.1992 - MSS SP25 Ed.2008 - NACE MR 0175 ISO 15156 Ed.2009- NACE MR 0103 Ed. 2012 - SUPPLIED MATERIAL MEETS SPECIFICATIONS AND P.O. REQUIREMENTS	
Material in accordance	ASME SA ASTM A105-11a	

Visual & Dimensional	SATISFACTORY	Origin	EUROPEAN UNION	Our Ref.	2014-2E201-0000326-0040

Notes ---

This Material Conforms to
ASME Section II Edition 2013
Initialed By: (u)
Date: Jan 16/2015

QUALITY CONTROL DEPT.	INSPECTION AUTHORITY	MANUFACTURER'S SYMBOL
Boris Fizzotti		IML or

10226

PO# 6576985703-AB61 Item# 4
Heat Number: 62U
Trans Am Piping Products Ltd. - Rev'd By: SB
Shipment/Seq #: S 14 - 1420 40

1" CL 3000 FS SCRD UNION
A105N

HT# 62U

I.M.L. - INDUSTRIA MECCANICA LIGURE S.P.A.
Via Giacomo Farina, 25 - 16039 Casarza Ligure - GE - ITALY
Tel. +39 0185 467681 - Fax +39 0185 466510 - E-mail quality.iml@farinagroup.com
MATERIAL TEST DEPARTMENT

COMPANY WITH QUALITY SYSTEM ISO 9001: 2008 CERTIFIED BY RINA CERT. N°23/91/S

INSPECTION CERTIFICATE EN 10204:2004 / 3.1 — Nr 25421 Dated 26.09.2014

TRANS AM PIPING PRODUCTS LTD.
8335 Endeavor Drive S.E.
Calgary, Alberta T3S 0A1 CA

Purchase Order Nr CI-14 - 247 C/O 5
Item Nr 59
Packing List Nr 761
Invoice Nr 698

Heat Code	Heat Nr		Description
62U	12/72672		FITTING UNION F/F THRD NPT 3M 1" A105N (NUT)

Material in accordance: ASME SA ASTM A105-13
NACE MR 0175 - ISO 15156 Ed. 2009 / NACE MR 0103 Ed. 2012
P.E.D. 97/23/EC ANNEX 1 PAR. 4.3

Material remarks: MATERIAL FULLY KILLED & FINE GRAIN PRACTICED

Element	C	Si	Mn	S	P	Cr	Ni	Mo	Ti	Cu
ASTM A105 (LADLE)	0,200	0,200	0,990	0,010	0,015	0,130	0,060	0,010	0,010	0,160

Element	V	Nb	N	Al			C.E.	PRE
ASTM A105 (LADLE)	0,002	0,002	--	0,025			0,403	--

Test specimen Sect. mm2	Test specimen Length mm	Shape 1=O - 2=□	Tensile N/mm2	Yield Strength > 0,2% N/mm2	Yield Strength > 1% N/mm2	Elongation %	Reduction of area %
122,65	50,00	1	519,0	328,0	--	32,6	58,0

HARDNESS HBW	TYPE	IMPACT TEST Test specimen	°C	1-Joule	2-Joule	3-Joule
161,0 - 184,0		10x10mm	-10	65	61	69

Heat treatment: Normalized at 880°-920°C / Air Cool — ELECTRIC FURNACE

Dimension in accordance: MSS SP83 Ed.2009 - ASME B1.20.1 Ed.2013 - MSS SP25 Ed.2013

Visual & Dimensional: SATISFACTORY — Origin: EUROPEAN UNION — Our Ref.: 2014-2E201-0000430-0058

Notes: 100% MANUFACTURED IN ITALY
SUPPLIED MATERIAL MEETS SPECIFICATIONS AND P.O. REQUIREMENTS

This Material Conforms to
ASME Section II Edition 2013
Initialed By:
Date: Jan 21/2015

QUALITY CONTROL DEPT.	INSPECTION AUTHORITY	MANUFACTURER'S SYMBOL
Boris Fizzoni		IML or

1" x 1/2" 3M Reducing Tee SA105N
HT # TN8

I.M.L. - INDUSTRIA MECCANICA LIGURE S.P.A. A01
Via Giancarlo Farina, 25 - 16030 Casarza Ligure - GE - ITALY
Tel. +39 0185 467661 - Fax +39 0185 466510 - E-mail quality.iml@farinagroup.com
MATERIAL TEST DEPARTMENT

COMPANY WITH QUALITY SYSTEM ISO 9001: 2008 CERTIFIED BY RINA CERT. N°23/91/S

INSPECTION CERTIFICATE EN 10204:2004 / 3.1 A02

Nr A03 2014-C_IML-25733 Data / Dated 01.10.2014 Z02

DNOW CANADA ULC A05
1800, 635-8th Avenue S.W.
Calgary, Alberta, Canada T2P 3M3 CA

Ordine / PO	25331611	A01
Item	1750	
DDT / Delivery note	2014-2E301-0001115	
Packing List	2014-2E401-0001031	
Fattura / Invoice	2014-2E401-0001031	A06
Ns. rif. / Our ref.	2014-2E201-0001184-0175	

Dest. UMB CA AB EDMONTON DC - DNOW CANADA ULC A05
2603 -76 AVENUE
T6P 1P6 EDMONTON - ALBERTA CA

Cod. colata B37 / Heat Code	Nr. colata B07 / Heat Nr	Quantità B08 / Quantity	Descrizione / Description
TN8	14/70646	200,00	FITTING RED.TEE THRD NPT 3M 1"x1/2" A105N

Mat. in acc. a / Mat. in acc. to B02 ASME SA ASTM A105-13
NACE MR 0175 - ISO 15156 Ed. 2009 / NACE MR 0103 Ed. 2012
P.E.D. 97/23/EC ANNEX 1 PAR. 4.3

Ann. mat. / Mat. remarks B02 MATERIAL FULLY KILLED & FINE GRAIN PRACTICED

Elementi / Elements C21 - C22	C	Si	Mn	S	P	Cr	Ni	Mo	Ti	Cu	V	Nb	N
LADLE ANALYSIS	0,190	0,180	0,930	0,008	0,014	0,100	0,060	0,010	0,018	0,200	0,003	0,002	0,000
	Al								CE LF	CE SF	F1	F2	PREN
LADLE ANALYSIS	0,025								0,385	0,345	0,373	0,110	–

CE LF=C+Mn/6+(Cr+Mo+V)/5+(Ni+Cu)/15 CE SF=C+Mn/6) F1=Cu+Ni+Cr+Mo+V F2=Cr+Mo

Provetta / Test specimen		Forma C10 / Shape	°C C03	Snervamento>0,2% C11 / Yield Strength>0,2%	Snervamento>1,0% C11 / Yield Strength>1,0%	Rottura C12 / Tensile	Allungamento C13 / Elongation	Contrazione C15 / Reduction of area
Sez/Sect mm2	L. mm	1=O - 2=□		MPa	MPa	MPa	%	%
122,65	50,00	1	20	322,0 ✓	–	515,0 ✓	32,6 ✓	51,0

DUREZZA / HARDNESS C22	RESILIENZA / IMPACT TEST					
HBW	Tipo/Type C10	Provetta / Test Specimen	°C C03	1-Joule C42	2-Joule C42	3-Joule C42	Media/Average C43
152,0 - 157,0 ✓	KV	10x10mm	-10	65	65	69	66,3

Tratt. Term. / Heat treatment C70 Normalized at 880°-920°C / Air Cool ELECTRIC FURNACE

Dim in acc. a / Dim. acc. to B14 ASME B16.11 Ed.2011 - ASME B1.20.1 Ed.2013 - MSS SP25 Ed.2013

Marcatura in acc. B05 / Marking in acc. to	MSS SP25 Ed. 2013	Vis. & Dim.	SATISFACTORY	Origine / Origin of Steel	EUROPEAN UNION

Note / Notes 100% MANUFACTURED IN ITALY
SUPPLIED MATERIAL MEETS SPECIFICATIONS AND P.O. REQUIREMENTS

This Material Conforms to
ASME Section II Edition 2013
Initialed By: Q
Date: Jan 21/2015

UFFICIO CONTROLLO QUALITA' A04 / QUALITY CONTROL DEPARTMENT	ENTE UFFICIALE DI COLLAUDO Z03 / INSPECTION AUTHORITY	MARCHIO PRODUZIONE A04 / MANUFACTURER'S SYMBOL
Boris Groth		IML or

1/2" x 1/4" XS Swage SA234 WPB

HT # K2871

3602

Current Date: Thu, 27 Nov 2014 00:31:23 +0000

Material Test Report

Report Number: 26976

Date: Mon, Dec 9th 2013

Description: 1/2" SWAGES & BULL PLUGS

Heat Treatment: AS ROLLED

Specification: A234-WPB/SA234-WPB

Material: &1022

Year of Revision:

CRN: 0A7470.5&R1

Comment: NA&E MR0103-07
MR0175/ISO 15156-2-03

Additional Comment: ASME SE&TION II SA234 WPB 2013

Chemical Analysis

Heat Code: K2871

Heat Number: 031066

C	0.190	Cu	0.000	Al	0.037
Mn	0.900	Ni	0.090	Ti	0.000
P	0.009	Cr	0.070		0.000
S	0.022	Mo	0.030		0.000
Si	0.240	V	0.000		0.000
N	0.000	Cb/Nb	0.000		0.000

Carbon Equivalency Formula Used:
&+(Mn/6)+(&r+Mo+V)/5+(Ni+&u)/15
CE= 0.37

Mechanical Tests

Yield PSI: 49700

Tensile PSI: 76000

Elongation: 33 % @ 2""

Reduction of Area %: 65

Size: .840" RND

Brinell Hardness: 149

Charpy Impact Test

Individual Values: (V1) ft/lbs (V2) ft/lbs (V3) ft/lbs

This Material Test Report meets DIN 50 049/EN 10 204 3.1.B Standard 1995

We hereby Certify that the material described has been tested in accordance with the specifications, and the results are correct as contained in the records of the Company.

Ian Shields
Q.A. Manager and Customer Service

KEDDCO

Sarnia
Toll Free: 1-866-511-1381
By regular telephone at: 519-336-2960
By fax at 519-344-3181
Mailing Address: PO Box 999, 645 Keddco St. Sarnia, ON N7T 7K6

Edmonton
Toll Free: 1-800-661-3809
By regular telephone at: 780-438-4944
By fax at 780-435-3917
Mailing Address: 4120 - 78 Av. Edmonton, AB T6B 3M8

This Material Conforms to
ASME Section II Edition 2013
Initialed By:
Date: Jan 20 / 2015

HT # E9X

1/4" 3M 90 deg threaded Elbow SA105N

PO- 14-561-02-01

I.M.L. - INDUSTRIA MECCANICA LIGURE S.P.A.
Via Giancarlo Farina, 25 - 16030 Casarza Ligure - GE - ITALY
Tel. +39 0185 467661 - Fax +39 0185 466510 - E-mail quality.iml@farinagroup.com
MATERIAL TEST DEPARTMENT

COMPANY WITH QUALITY SYSTEM ISO 9001: 2008 CERTIFIED BY RINA CERT. N° 23/91/S

INSPECTION CERTIFICATE EN 10204:2004 / 3.1

Nr 23657 Dated 08.01.2013

FORGED FLANGES & FITTINGS LTD

CASTLE HOUSE, STATION RD
NEW BARNET-EN5 1PE - UNITED KINGDOM GB

Purchase Order Nr	3767
Item Nr	044
Packing List Nr	9
Invoice Nr	9

Heat Code	Heat Nr	Quantity	Description
E9X	11/79390	300,00	FITTING 90 ELB. THRD NPT 2/3M 1/4" A105N

Element	C	Si	Mn	S	P	Cr	Ni	Mo	Ti	Cu
ASTM A105 (LADLE)	0,180	0,260	1,120	0,010	0,012	0,100	0,060	0,020	0,022	0,180

Element	V	Nb	N	AL	C.E.	PRE
ASTM A105 (LADLE)	0,003	0,002	--	0,031	0,407	--

Test specimen Sect. mm2	Test specimen Lenght mm	Shape 1=O - 2=□	Tensile N/mm2	Yeld Strenght > 0,2% N/mm2	Yeld Strenght >1% N/mm2	Elongation %	Reduction of area %
122,65	50,00	1	527,0	331,0	--	31,8	56,0

HARDNESS HBW	IMPACT TEST TYPE	Test specimen	°C	1-Joule	2-Joule	3-Joule
168,0 - 175,0	KV	10x10mm	-10	65	65	60

Heat treatment	Normalized at 880°-920°C / Air Cool				ELECTRIC FURNACE
Dimension in accordance	ASME B16.11 Ed.2011 - ANSI/ASME B1.20.1 Ed.1992 - MSS SP25 Ed.2008 - NACE MR 0175 ISO 15156 Ed.2009- NACE MR 0103 Ed. 2012 - SUPPLIED MATERIAL MEETS SPECIFICATIONS AND P.O. REQUIREMENTS				
Material in accordance	ASME SA ASTM A105-11				
Visual & Dimensional	SATISFACTORY	Origin	EUROPEAN UNION	Our Ref.	2011-2E201-0001041-0044

Notes —

This Material Conforms to
ASME Section II Edition 2013
Initialed By: B
Date: JAN 20/2015

QUALITY CONTROL DEPT.	INSPECTION AUTHORITY	MANUFACTURER'S SYMBOL
Boris Fizzotti		IML or

1/4" 3M NPT TEE 5410SV
HT # UUCA

M.E.G.A.

INSPECTION CERTIFICATE
Certificato d'ispezione

REPORT N. / Rapporto N.	TC-013690-14-0001	Issued on / Emesso il	03/09/2014	Customer / Cliente	CE FRANKLIN, A DIVISION OF NOV WILSON CANADA ULC 1800,635 - 8th AVENUE SW CALGARY, ALBERTA, T2P 3M3 - CANADA
Revision / Revisione	0	According to / In accordo a	EN 10204:2005	Type / Tipo	3.1

Job n. / Com. n. 13690 — Page n./ Pagina n. 8 of 17

Purchase order and project/Ordine e progetto: 25315072

DESCRIPTION / DESCRIZIONE

Test Prova	Item Pos.	Qty Q.tà	Customer code Codice cliente	Material Materiale	Heat Colata	Product Prodotto	
VBSU	27	40	26756	A/SA105-13	12/32301	R. HEAD PLUG NPT A/SA105N 2	26756
KFCT	28	1050	4023	A/SA105-13	08/72761	TEE S. 2000 NPT A/SA105N 1/4	4023
UUCA	29	1000	4033	A/SA105-13	202145	TEE S. 3000 NPT A/SA105N 1/4	4033
VRFC	30	10	6177	A/SA105-13	P4121241113	TEE S. 3000 SW A/SA105N 1.1/4	6177
UCCX	31	34	8427	A/SA350-13 LF2 CL.1	10/71931	TEE S. 3000 NPT LF2 CL1 2	8427

Test Prova	HEAT TREATMENT DATA AND REFERENCES TO OTHER CERTIFICATES / Dettagli di trattamento termico e riferimenti ad altri certificati	RAW AND FORGING MATERIAL CERTIFICATES / Certificati di acciaieria/forgia
VBSU	MATERIAL PRODUCED BY ELECT.FURNACE-NORMALIZED AT 900 C COOLED IN STILL AIR.	CERT.24439.RIVA*587505MEGA*
KFCT	MATERIAL PRODUCED BY ELECT.FURNACE-NORMALIZED AT 900 C COOLED IN STILL AIR.	CERT.381.EVASI*554018MEGA*
UUCA	MATERIAL PRODUCED BY ELECT.FURNACE-NORMALIZED AT 900 C COOLED IN STILL AIR.	CERT.181.EVASI*579134MEGA
VRFC	MATERIAL PRODUCED BY ELECT.FURNACE-NORMALIZED AT 880 C COOLED IN STILL AIR.	CERT.12813.MEGA/I*592979MEGA
UCCX	MATERIAL PRODUCED BY ELECTRIC FURNACE-QUENCHED AT 920 C TEMPERED AT 590 C	CERT.11054.MEGA/I*573697MEGA

Test Prova	Test loc. Preso a	Orient. Direz.	TENSILE TEST / Trazione: Specimen / Provino Shape Forma	A [mm²] Sezione	L [mm] Lungh.	Yield strength Snerv. [Mpa] Min:	Tensile strength Rottura [Mpa] Min:	Elongation Allung. [%] Min:	Red. Of Area Contraz. [%] Min:	CVN (KV) / Prova di resilienza: Dimens. Dimens. [mm]	T Temp. [°C]	Abs. Energy Energia ass. [J]	Shear A Area d [%]	Lat Exp Esp. Lat. [mm]	Bend Piega	Flatten. Schiacc.	Hardness Durezza [HBN]
VBSU	T/2	LONG	Round	122.700	50.000	348.900	519.500	31.500	67.200	10x10x55	0	130 - 129 - 136	--	--			156 - 158
KFCT	T/2	LONG	Round	30.600	25.000	319.000	533.000	29.400	66.700	10x10x55	0	54 - 58 - 60	--	--			156 - 163
UUCA	T/2	LONG	Round	30.600	25.000	303.000	524.000	32.200	69.400	10x10x55	0	34 - 46 - 44	--	--			143 - 149
VRFC	T/2	LONG	Round	30.400	25.000	294.500	516.000	38.500	72.900	10x10x55	0	129 - 151 - 150	--	--			149 - 151
UCCX	T/2	LONG	Round	122.500	50.000	347.500	511.200	30.000	76.900	10x10x55	-50	52 - 64 - 70	--	--			158 - 164

Test Prova	C [%]	Si [%]	Mn [%]	S [%]	P [%]	Cr [%]	Ni [%]	Mo [%]	Ti [%]	Cu [%]	V [%]	Al [%]	Co [%]	Nb [%]	N [%]	Sn [%]	W [%]	B [%]	Fe [%]	Zr [%]	CE[A] [%]	PREN[B] [%]	X fact.[C] [%]	J fact.[D] [%]
VBSU	0.1950	0.2500	1.0200	0.0070	0.0140	0.0900	0.0600	0.0100	0.0170	0.1800	0.0110	0.0260		0.0020		0.0090					0.4032			
KFCT	0.1950	0.1900	0.9000	0.0070	0.0120	0.1200	0.0500	0.0100	0.0190	0.1500	0.0180	0.0210				0.0070					0.3879			
UUCA	0.1700	0.2000	1.0490	0.0020	0.0150	0.1150	0.1550	0.0280		0.2260	0.0010	0.0230		0.0010		0.0110					0.3990			
VRFC	0.1700	0.2500	1.0600	0.0060	0.0150	0.1550	0.0560	0.0130		0.1100	0.0040	0.0300		0.0026				0.0002			0.3921			
UCCX	0.1900	0.2000	0.8900	0.0100	0.0080	0.1100	0.0500	0.0100	0.0210	0.2100	0.0190	0.0240		0.0010		0.0080					0.3834			

REMARKS / Note

1: MATERIAL ACCORDING TO NACE MR0175/ISO 15156-1-2-3 Ed.2009. MATERIAL ACCORDING TO NACE MR0103 Ed.2012
2: FULLY KILLED STEEL AND FINE GRAIN TREATED

A: CE = C + Mn/6 + (Cr+Mo+V)/5 + (Cu+Ni)/15 | B: PREN = Cr + 3.3Mo + 16N
C: X factor = (10P + 5Sb+4Sn+As)/100 - elements expressed in ppm
D: J factor = ((Mn + Si)(P + Sn)) x 104

Quality inspector representative / Ispettore controllo qualità: Emmanuel Centemeri

This certificate is issued by a computerized system and it is valid with electronic signature. On the original certificate the trademark M.E.G.A. is printed in green color.

Form QC-01-01 Rev. 0 2013-03-15

1/4" 3/6M Threaded plug SA105N
HT # MZ

I.M.L. - INDUSTRIA MECCANICA LIGURE S.P.A. A01
Via Giancarlo Farina, 25 - 16030 Casarza Ligure - GE - ITALY
Tel. +39 0185 467661 - Fax +39 0185 466510 - E-mail quality.iml@farinagroup.com
MATERIAL TEST DEPARTMENT

COMPANY WITH QUALITY SYSTEM ISO 9001: 2008 CERTIFIED BY RINA CERT. N° 23/91/S

INSPECTION CERTIFICATE EN 10204:2004 / 3.1 A02

Nr A03 2014-C_IML-25942 Data / Dated 26.11.2014 Z02

DNOW CANADA ULC A06
1800, 635-8th Avenue S.W.
Calgary, Alberta, Canada T2P 3M3 CA

Ordine / PO	25331611	A07
Item	1410	
DDT / Delivery note	2014-2E301-0001368	
Packing List	2014-2E301-0001368	
Fattura / Invoice	2014-2E401-0001298	A08
Ns. rif. / Our ref.	2014-2E201-0001184-0141	

Dest. UMB CA AB EDMONTON DC - DNOW CANADA ULC A08
2603 -76 AVENUE
T6P 1P6 EDMONTON - ALBERTA CA

Cod. colata B07 / Heat Code	Nr. colata B07 / Heat Nr	Quantità B05 / Quantity	Descrizione / Description B01 - (B09 - B11)
MZ	16324	3.600,00	FITTING HEX.H.PLUG 3/8MTHRD NPT 1/4" A105N

Mat. in acc. a / Mat. in acc. to B04 ASME SA ASTM A105-13
NACE MR 0175 - ISO 15156 Ed. 2009 / NACE MR 0103 Ed. 2012
P.E.D. 97/23/EC ANNEX 1 PAR. 4.3

Ann. mat. / Mat. remarks B02 MATERIAL FULLY KILLED & FINE GRAIN PRACTICED

Elementi / Elements (C71 - C92)	C	Si	Mn	S	P	Cr	Ni	Mo	Ti	Cu	V	Nb	N
LADLE ANALYSIS	0,180	0,158	0,650	0,014	0,010	0,100	0,030	0,010	0,000	0,030	0,001	0,002	0,000

	Al	CE LF	CE SF	F1	F2	PREN
LADLE ANALYSIS	0,000	0,315	0,288	0,171	0,110	--

CE LF=C+Mn/6+(Cr+Mo+V)/5+(Ni+Cu)/15 CE SF=C+Mn/6) F1=Cu+Ni+Cr+Mo+V F2=Cr+Mo

Provetta / Test specimen Sez/Sect mm2	L mm	Forma C10 / Shape 1=O - 2=□	°C C03	Snervamento>0,2% C11 / Yield Strength>0,2% MPa	Snervamento>1,0% C11 / Yield Strength>1,0% MPa	Rottura C12 / Tensile MPa	Allungamento C13 / Elongation %	Contrazione C15 / Reduction of area %
122,65	50,00	1	20	325,0	--	520,0	32,0	61,0

DUREZZA / HARDNESS C22 HBW	RESILIENZA / IMPACT TEST Tipo/Type C40	Provetta / Test Specimen	°C C03	1-Joule C42	2-Joule C42	3-Joule C42	Media/Average C43
158,0 - 164,0	KV	10x10mm	-10	73	71	74	72,6

Tratt. Term. / Heat treatment C70 Normalized at 880°-920°C / Air Cool — ELECTRIC FURNACE

Dim in acc. a / Dim. acc. to B14 ASME B16.11 Ed.2011 - ASME B1.20.1 Ed.2013 - MSS SP25 Ed.2013

Marcatura in acc. B06 / Marking in acc. to	MSS SP25 Ed. 2013	Vis. & Dim.	SATISFACTORY	Origine / Origin of Steel	EUROPEAN UNION

Note / Notes 100% MANUFACTURED IN ITALY
SUPPLIED MATERIAL MEETS SPECIFICATIONS AND P.O. REQUIREMENTS

This Material Conforms to
ASME Section II Edition 2013
Initialed By: @
Date: Jan 16/2015

UFFICIO CONTROLLO QUALITA' / QUALITY CONTROL DEPARTMENT A05	ENTE UFFICIALE DI COLLAUDO / INSPECTION AUTHORITY Z03	MARCHIO PRODUZIONE / MANUFACTURER'S SYMBOL A04
Boris Fiala		IML or

4004

PO# 657620525-AB61 Item# 1
Heat Number: K386
Trans Am Piping Products Ltd. . Rev'd By: SB
Shipment/Seq #: S 14 - 1505 14

1/2" FS SCRD HEX HEAD PLUG A105N

HT#K386

I.M.L. - INDUSTRIA MECCANICA LIGURE S.P.A.
Via Giancarlo Farina, 25 - 16030 Casarza Ligure - GE - ITALY
Tel. +39 0185 467661 - Fax +39 0185 466510 - E-mail quality.iml@farinagroup.com
MATERIAL TEST DEPARTMENT

COMPANY WITH QUALITY SYSTEM ISO 9001: 2008 CERTIFIED BY RINA CERT. N°23/91/S

INSPECTION CERTIFICATE EN 10204:2004 / 3.1 — Nr 25501 Dated 14.07.2014

TRANS AM PIPING PRODUCTS LTD.
9335 Endeavor Drive S.E.
Calgary, Alberta T3S 0A1 CA

Purchase Order Nr	CI-14-386
Item Nr.	148
Packing List Nr	845
Invoice Nr	772

Heat Code	Heat Nr		Description
K386	14/70544		FITTING HEX.H PLUG 3/8M THRD NPT 1/2" A105N

Material in accordance: ASME SA ASTM A105-13
NACE MR 0175 - ISO 15156 Ed. 2009 / NACE MR 0103 Ed. 2012
P.E.D. 97/23/EC ANNEX 1 PAR. 4.3

Material remarks: MATERIAL FULLY KILLED & FINE GRAIN PRACTICED

Element	C	Si	Mn	S	P	Cr	Ni	Mo	Ti	Cu
ASTM A105 (LADLE)	0,180	0,210	0,900	0,004	0,013	0,120	0,050	0,010	0,017	0,200

Element	V	Nb	N	AL					C.E.	PRE
ASTM A105 (LADLE)	0,003	0,002	--	0,025					0,373	--

Test specimen Sect. mm2	Test specimen Length mm	Shape 1=O - 2=□	Tensile N/mm2	Yield Strength > 0,2% N/mm2	Yield Strength >1% N/mm2	Elongation %	Reduction of area %
122,65	50,00	1	509,0	331,0	--	35,6	69,8

HARDNESS		IMPACT TEST				
HBW	TYPE	Test specimen	°C	1-Joule	2-Joule	3-Joule
155,0 - 159,0		10x10mm	-10	65	61	66

Heat treatment	Normalized at 880°-920°C / Air Cool	ELECTRIC FURNACE
Dimension in accordance	ASME B16.11 Ed.2011 - ASME B1.20.1 Ed.2013 - MSS SP25 Ed.2013	

Visual & Dimensional	SATISFACTORY	Origin	EUROPEAN UNION	Our Ref.	2014-2E201-0000843-0148

Notes: 100% MANUFACTURED IN ITALY
SUPPLIED MATERIAL MEETS SPECIFICATIONS AND P.O. REQUIREMENTS

This Material Conforms to
ASME Section II Edition 2013
Initialed By: (W)
Date: Jan 16/2015

QUALITY CONTROL DEPT.	INSPECTION AUTHORITY	MANUFACTURER'S SYMBOL
Boris Fizzotti		IML or

1" 3M Threaded Elbow SA105N

~~HT# 13/74742~~

HT# 70H

I.M.L. - INDUSTRIA MECCANICA LIGURE S.P.A. A01
Via Giancarlo Farina, 25 - 16030 Casarza Ligure - GE - ITALY
Tel. +39 0185 467661 - Fax +39 0185 466510 - E-mail quality.iml@farinagroup.com
MATERIAL TEST DEPARTMENT

COMPANY WITH QUALITY SYSTEM ISO 9001: 2008 CERTIFIED BY RINA CERT. N°23/91/S

INSPECTION CERTIFICATE EN 10204:2004 / 3.1 A02

Nr A03 2014-C_IML-25733 Data / Dated 01.10.2014 Z02

DNOW CANADA ULC A06
1800, 635-8th Avenue S.W.
Calgary, Alberta, Canada T2P 3M3 CA

Ordine / PO	25331611	A07
Item	830	
DDT / Delivery note	2014-2E301-0001115	
Packing List	2014-2E401-0001031	
Fattura / Invoice	2014-2E401-0001031	A08
Ns. rif. / Our ref.	2014-2E201-0001184-0083	

Dest. UMB CA AB EDMONTON DC - DNOW CANADA ULC A09
2603 -76 AVENUE
T6P 1P6 EDMONTON - ALBERTA CA

Cod. colata / Heat Code B07	Nr. colata / Heat Nr B07	Quantità / Quantity B09	Descrizione / Description B01 - (B09 - B11)
70H	13/74742	570,00	FITTING 90 ELB. THRD NPT 3M 1" A105N

Mat. in acc. a / Mat. in acc. to B02 ASME SA ASTM A105-13
NACE MR 0175 - ISO 15156 Ed. 2009 / NACE MR 0103 Ed. 2012
P.E.D. 97/23/EC ANNEX 1 PAR. 4.3

Ann. mat. / Mat. remarks B02 MATERIAL FULLY KILLED & FINE GRAIN PRACTICED

Elementi / Elements (C71 - C92)	C	Si	Mn	S	P	Cr	Ni	Mo	Ti	Cu	V	Nb	N
LADLE ANALYSIS	0,190	0,210	0,970	0,009	0,012	0,110	0,050	0,010	0,021	0,170	0,003	0,002	0,000
	Al								CE LF	CE SF	F1	F2	PREN
LADLE ANALYSIS	0,026								0,391	0,352	0,343	0,120	--

CE LF=C+Mn/6+(Cr+Mo+V)/5+(Ni+Cu)/15 CE SF=C+Mn/6) F1=Cu+Ni+Cr+Mo+V F2=Cr+Mo

Provetta / Test specimen		Forma / Shape C10	°C C03	Snervamento>0,2% / Yield Strength>0,2% C11	Snervamento>1,0% / Yield Strength>1,0% C11	Rottura / Tensile C12	Allungamento / Elongation C13	Contrazione / Reduction of area C15
Sez/Sect mm2	L. mm	1=O - 2=□		MPa	MPa	MPa	%	%
122,65	50,00	1	20	331,0	–	509,0	35,0	58,8

DUREZZA / HARDNESS C22	RESILIENZA / IMPACT TEST						
HBW	Tipo/Type C40	Provetta / Test Specimen	°C C03	1-Joule C42	2-Joule C42	3-Joule C42	Media/Average C43
151,0 - 158,0	KV	10x10mm	-10	65	70	71	68,7

Tratt. Term. / Heat treatment C70 Normalized at 880°-920°C / Air Cool ELECTRIC FURNACE

Dim in acc. a / Dim. acc. to B14 ASME B16.11 Ed.2011 - ASME B1.20.1 Ed.2013 - MSS SP25 Ed.2013

Marcatura in acc. / Marking in acc. to B08	MSS SP25 Ed. 2013	Vis. & Dim.	SATISFACTORY	Origine / Origin of Steel	EUROPEAN UNION

Note / Notes 100% MANUFACTURED IN ITALY
SUPPLIED MATERIAL MEETS SPECIFICATIONS AND P.O. REQUIREMENTS

This Material Conforms to
ASME Section II Edition 2013
Initialed By: [illegible]
Date: Jan 16/2015

UFFICIO CONTROLLO QUALITA' / QUALITY CONTROL DEPARTMENT A05	ENTE UFFICIALE DI COLLAUDO / INSPECTION AUTHORITY Z03	MARCHIO PRODUZIONE / MANUFACTURER'S SYMBOL A04
Boris Ghetti		IML or

INSPECTION CERTIFICATE

Purchaser : CCTF DIVISION OF EMCO LIMITED.

Date : Jun. 12 , 1996

BENKAN

Order No. 823765/FF83343

Certificate No. T-19962000132

Invoice No.

Specifications for Material: ASTM A234 GR. WPB MADE FROM SEAMLESS PIPE

Specifications for Inspection : ANSI B16.9, B16.28, DIN 50049 3.1B

Job No. B737 ASTM A234/ASME SA234 WPB CSA Z245-11 NACE MR0175-94

No.		MFG No.	Product & Size (T:*1)	Quantity	Visual & Dimensional Inspection	HEAT TREATMENT (NOTE 1)	HARDNESS ACTUAL DATA
1	7510250	59005	90EL WPB 3/4 S40	500	GOOD	HOT FINISHED CONDITION	HB : 120 - 150
2		63001	90EL WPB 1 S40	1,000	GOOD	A	HB : 120 - 135
3		65004	90EL WPB 11/4 S40	2,000	GOOD	A	HB : 115 - 145
4		65005	90EL WPB 11/2 S40	2,000	GOOD	A	HB : 125 - 140
5		61008	90EL WPB 2 S40	200/2,000	GOOD	A	HB : 120 - 150

Specification		Chemical Composition %											Tension Test *2			
		C	Si	Mn	P	S	Cu	Ni	Cr	Mo	V	Nb	C.E.	YS	TS	E	
Min.		x 100	x 100	x 100	x 1000	x 1000	x 100	x 100	x 100	x 100	x 100	x 1000	x 100	P.S.I XXXXX^2		%	HARDNESS MAX
Max.			10	29										35,000	60,000	30	197 HB : GOOD
Heat No.		23		106	50	58									85,000		
1	00949	20	22	69	11	1	3	3	2	1	0	0	33	48,200	65,400	49	
2	567159	13	14	75	7	1	9	6	8	3	1	<1	29	47,600	68,500	44	
3	10998	19	22	73	11	1	1	3	3	0	0	0	32	51,500	74,300	46	
4	45149	16	24	75	12	4	11	3	1	1	0	1	30	43,900	67,400	47	
5	46869	17	25	76	14	3	5	3	2	1	0	1	31	56,100	78,300	39	

ECTS
VALIDATED COPY
Daniel Valois
Q.A. Chief Inspector Edmonton
Date July 29/96

(NOTE 1) A : HOT FORMED WITH FINAL TEMPERATURE BETWEEN 620°C - 980°C, AIR COOLING
S : STRESS RELIEVING 675°C x 0.5 HR. AIR COOLING
N : NORMALIZING 910°C x 0.5 HR. AIR COOLING
* N : NORMALIZING 850°C x 0.5 HR. AIR COOLING

We hereby certify that the product described herein has been manufactured in accordance with the specifications concerned and also with the purchaser's requirements and that the test results shown herein are correct.

* 1 : "T" symbolized wall thickness in mm. * 2 : YS Yield strength TS = Tensile strength E = Elongation

T. Sasaki

Manager of Quality Assurance Department
Thai Benkan Co., Ltd.
58 Soi Watkrunai, Bangkru, Prapadaeng,
Samutprakarn, 10130 Thailand.

Q-001

3/4" SA234 WPB SEAMLESS HT# 59005

3/4 SPI UNION 3/4 UNION
HT# 3615

MILL TEST & INSPECTION CERTIFICATE

ACCORDING TO EN 10204 :2004 3.1

柏緯鐵工股份有限公司
高雄市仁武區烏林里仁心路 303 號
BOTH-WELL STEEL FITTINGS CO., LTD.
NO.303, JEN-HSIN ROAD JEN-WU DISTRICT
KAOHSIUNG CITY, TAIWAN R.O.C. (81460)
TEL: 886-7-371-0497, 371-1536, 372-0260 FAX: 886-7-371-3864, 371-3882
web site:http://www.bothwell.com.tw e-mail:bothwell@www.bothwell.com.tw or box@bothwell.com.tw

An ISO 9001:2008 Registered Manufacturer

ISO 9001 BUREAU VERITAS Certification N° TW110622 ANAB ACCREDITED

CUSTOMER : WFF FITTINGS AND FLANGES (CANADA) LTD.
CERT. NO : 120740 L/C NO :
ORDER NO : C000129 DATE : 03/31/2012
INVOICE NO : BW01110009142 PAGE : 2 ORIGIN : TAIWAN

ITEM	BW HT.CD.	RAW MATERIAL HEAT NO.	DESCRIPTION	QUANTITY	SPECIFICATION FOR MATERIAL	SPECIFICATION FOR FITTING	INSPECTION SURFACE	INSPECTION DIM.
001	3650	324036	UNION 1-1/2" 3000# S/W 1092138 10411	300 PC	ASTM A105N -05	MSS SP-83 - 2006	GOOD	GOOD
004	3266	313715	UNION 1/2" 6000# NPT 1090992 870392	100 PC	ASME SA105N-A08			
006	3615	322971	UNION 3/4" 3000# NPT 1094395 596618	500 PC				
008	3613	322969	UNION 1" 3000# S/W 1090618 7796	200 PC				
010	3617	323493	UNION 1" 6000# NPT 1091653 541888	400 PC				

CHEMICAL COMPOSITION (%)

ITEM	BW HT.CD.	C	Si	Mn	P	S	Cu	Cr	Ni	Mo	V	Cb(Nb)	N	Al	Ti	Zr		CE	MATERIAL SUPPLIER
Min		-	0.100	0.600	-	-	-	-	-	-	-	-	-					-	
Max		0.350	0.350	1.050	0.035	0.040	0.400	0.300	0.400	0.120	0.080	-	-					0.430	
001	3650	0.200	0.200	0.830	0.018	0.010	0.170	0.080	0.060	0.020	0.002	0.001	-					0.374	
004	3266	0.210	0.200	0.830	0.015	0.016	0.220	0.070	0.060	0.010	0.002	0.001	-					0.383	
006	3615	0.200	0.190	0.860	0.023	0.006	0.150	0.090	0.060	0.020	0.002	0.001	-					0.380	
008	3613	0.190	0.200	0.820	0.027	0.005	0.160	0.009	0.006	0.020	0.002	0.000	-					0.344	
010	3617	0.200	0.200	0.810	0.016	0.012	0.140	0.060	0.060	0.020	0.002	0.002	-					0.365	

MECHANICAL PROPERTIES

ITEM	BW HT.CD.	T. S. (KSI)	Y. S. (KSI)	EL. (%)	R of A (%)	Hardness (HB)(AVG)	Charpy Impact °F / 0°C MIN./AVG. / (Joule) 1	2	3	AVG.	HEAT TREATMENT
Min		70.0	36.0	22.0	30.0	-					NORMALIZED
Max		-	-	-	-	187					
001	3650	75.7	56.5	35.2	63.6	141 141					860°C A.C.
004	3266	73.0	47.5	33.4	64.3	140 141					
006	3615	75.3	52.6	33.6	62.6	141 141					
008	3613	75.6	53.7	35.4	66.4	141 141					
010	3617	75.6	53.1	34.2	65.5	141 141					

ADDITIONAL TEST/REMARKS
CONFORMS TO NACE MR0175-09 /MR0103-10
STEEL MAKING PROCESS : ELECTRIC FURNACE

WE HEREBY CERTIFY, THAT THE MATERIAL DESCRIBED ABOVE HAS BEEN TESTED AND COMPLIES WITH THE TERMS OF THE ORDER CONTRACT.

C.C. Huang
Q.C.MANAGER
CHEN CHI HUANG

Y.Y. Chang
INSPECTOR
YUAN YAO CHANG

BW-D0839 REV:1

This Material Conforms to
ASME Section II Edition 2013
Initialed By: [illegible]
Date: Jan 16/2015

This Material Conforms to
ASME Section II Edition 2013
Initialed By: Q
Date: Jan 12/2015

1.3M SA 105 N SEAMLESS ETC&W
T/T # JTRA

M.E.G.A.

INSPECTION CERTIFICATE
Certificato d'ispezione

REPORT N. / Rapporto N.	TC-013935-14-0001	Issued on / Emesso il	17/10/2014	Customer / Cliente	DNOW CANADA ULC P.O. BOX 4395 STATION C CALGARY, ALBERTA, T2T 5N2 - CANADA
Revision / Revisione	0	According to / In accordo a	EN 10204:2005	Type / Tipo	3.1

Job n. / Com. n. 13935 — Page n./ Pagina n. 2 of 6

Purchase order and project/Ordine e progetto: 25328807

DESCRIPTION / DESCRIZIONE

Test Prova	Item Pos.	Qty Q.tà	Customer code Codice cliente	Material Materiale	Heat Colata	Product Prodotto
SBAB	6	200	3909	A/SA105-13	113966	COUPLING S. 3000 NPT A/SA105N 4
JNDD	8	37	6170	A/SA105-13	13/75437	90 DEG. ELBOW S. 3000 SW A/SA105N 1
JTRA	8	173	6170	A/SA105-13	JTRU*1T0000276	90 DEG. ELBOW S. 3000 SW A/SA105N 1
UIXB	9	1050	3955	A/SA105-13	P4111146336	90 DEG. ELBOW S. 2000 NPT A/SA105N 1/2
PKXB	10	200	8419	A/SA350-13 LF2 Cl.1	09/78749	90 DEG. ELBOW S. 3000 NPT LF2 CL1 1/2

Test Prova	HEAT TREATMENT DATA AND REFERENCES TO OTHER CERTIFICATES / Dettagli di trattamento termico e riferimenti ad altri certificati	RAW AND FORGING MATERIAL CERTIFICATES / Certificati di acciaieria/forgia
SBAB	MATERIAL PRODUCED BY ELECT.FURNACE-NORMALIZED AT 920 C COOLED IN STILL AIR.	CERT.321467/1.TUBOS REUNIDOS*
JNDD	MATERIAL PRODUCED BY ELECT.FURNACE-NORMALIZED AT 880 C COOLED IN STILL AIR.	CERT.4578-13-05 MEGA/I*0016MEGA
JTRA	MATERIAL PRODUCED BY ELECT.FURNACE-NORMALIZED AT 900 C COOLED IN STILL AIR.	CERT.117.EVASI* MEGA
UIXB	MATERIAL PRODUCED BY ELECT.FURNACE-NORMALIZED AT 900 C COOLED IN STILL AIR.	CERT.12002.MEGA/I*584490MEGA
PKXB	MATERIAL PRODUCED BY ELECTRIC FURNACE-QUENCHED AT 900 C TEMPERED AT 610 C	CERT.11200.MEGA/I*575698MEGA

Test Prova	Test loc. Preso a	Orient. Direz.	TENSILE TEST / Trazione: Specimen / Provino Shape Forma	A [mm²] Sezione	L [mm] Lungh.	Yield strength Snerv. [Mpa] Min:	Tensile strength Rottura [Mpa] Min:	Elongation Allung. [%] Min:	Red. Of Area Contraz. [%] Min:	CVN (KV) / Prova di resilienza: Dimens. Dimens. [mm]	T Temp. [°C]	Abs. Energy Energia ass. [J]	Shear A Area d [%]	Lat Exp Esp. Lat. [mm]	Bend Piega	Flatten. Schiacc.	Hardness Durezza [HBN]
SBAB	T/2	LONG	Round	30.100	25.000	284.800	491.700	42.700	73.300	10x10x55	0	131 - 138 - 143	--	--			144 - 146
JNDD	T/2	LONG	Round	30.000	25.000	273.100	495.800	43.000	63.800	10x10x55	0	92 - 72 - 60	--	--			146 - 148
JTRA	T/2	LONG	Round	122.300	50.000	339.900 ✓	525.300 ✓	34.900 ✓	64.800	10x10x55	0	135 - 154 - 135	--	--			143 - 145
UIXB	T/2	LONG	Round	30.600	25.000	301.000	523.000	32.200	68.800	10x10x55	0	36 - 48 - 46	--	--			143 - 149
PKXB	T/2	LONG	Round	30.700	25.000	382.500	543.600	28.400	68.300	10x10x55	-46	100 - 98 - 102	--	--			159 - 163

Test Prova	C [%]	Si [%]	Mn [%]	S [%]	P [%]	Cr [%]	Ni [%]	Mo [%]	Ti [%]	Cu [%]	V [%]	Al [%]	Co [%]	Nb [%]	N [%]	Sn [%]	W [%]	B [%]	Fe [%]	Zr [%]	CE[A]	PREN[B] [%]	X fact.[C] [%]	J fact.[D] [%]
SBAB	0.1900	0.2600	0.8000	0.0066	0.0090	0.0620	0.0530	0.0131		0.1143	0.0002			0.0005				0.0001			0.3495			
JNDD	0.1800	0.2000	0.9000	0.0100	0.0130	0.1700	0.0900	0.0200	0.0170	0.2000	0.0030	0.0280		0.0020		0.0110					0.3879			
JTRA	0.1730 ✓	0.2290 ✓	0.9140 ✓	0.0090 ✓	0.0090 ✓	0.0990 ✓	0.0880 ✓	0.0280 ✓		0.1400 ✓		0.0280		0.0200							0.3659			
UIXB	0.1900	0.2450	1.1200	0.0020	0.0130	0.1300	0.0160	0.0040		0.0260	0.0040	0.0320		0.0023				0.0002			0.4070			
PKXB	0.2000	0.2200	0.8900	0.0080	0.0190	0.0900	0.0500	0.0100	0.0200	0.1600	0.0180	0.0220		0.0010		0.0080					0.3859			

REMARKS / Note

1: MATERIAL ACCORDING TO NACE MR0175/ISO 15156-1-2-3 Ed.2009. MATERIAL ACCORDING TO NACE MR0103 Ed.2012
2: FULLY KILLED STEEL AND FINE GRAIN TREATED

A: CE = C + Mn/6 + (Cr+Mo+V)/5 + (Cu+Ni)/15 | B: PREN = Cr + 3.3Mo + 16N
C: X factor = (10P + 5Sb+4Sn+As)/100 - elements expressed in ppm
D: J factor = ((Mn + Si)(P + Sn)) x 104

Quality inspector representative / Ispettore controllo qualità: Emmanuel Centemeri

This certificate is issued by a computerized system and it is valid with electronic signature. On the original certificate the trademark M.E.G.A. is printed in green color.

Form QC-01-01 Rev. 0 2013-03-15

Heat#: C99A3 1 3000 SCRD COUPLING A105N MACH TO SCRD/SW

PO- 14-561-01

This Material Conforms to
ASME Section II Edition 2013
Initialed By: (9)
Date: Jan 13/2017

CUENTE / Customer / Client

CERTIFICADO DE INSPECCION

Inspection Certificate - Certificat de Réception

DIN EN 10204 / 3.1
ISO 10474 / 3.1

FECHA: Date: 24/02/2014 N.º No. 163772 HOJA: Page: 1

ISO 14001 CERTIFIED SGI 1022154 · ISO 9001 CERTIFIED SGI 0000236 · OHSAS 18001 CERTIFIED SGI 0000997

Management Systems certified by LRQA®

ULMA

ULMA FORJA, S.COOP.
Bº Zubillaga, 3 - Apdo. 14
20560 OÑATI (Gipuzkoa) SPAIN
Tel.: 34 - 943 780332
Fax: 34 - 943 781800
E-mail: ulma@ulmapiping.com

Packing List: 108563

PRODUCTO / Article - Produit: FITTING

SU PEDIDO N.º / Your Order No. / Votre Cde. N.º: 174056-HOUSTON

DE / cL - de: 11/02/2013

Certified acc. PED 97/23/EC+AD2000-W0 by TÜV Rheinland N.º 01 202 E/O 02 7443

NORMAS APLICABLES / Requirements - Normas Applicables: ASME B16.11-2013

MATERIAL CORRESPONDIENTE / Material Correspondent - Qualité: ASME SA105M-13, ASTM A105M-13

MODO DE FUSION (*) / Steel Making - Elaboration du fusion: NACE MR0175/ISO15156-2-09 & MR0103-12
E = Elec. Y = Oxígeno básico

MARCA DEL FABRICANTE / Mark of factory / Marque du fabricant

DEPARTAMENTO / Section / Département: QUALITY ASSURANCE

PARTIDA / Item / Poste	CANTIDAD / Quantity / Quantité	DESCRIPCION / Description / Description	OBSERVACIONES / Remarks / Observations (*)	COLADA N.º / Heat No / N.º Coulée	RESISTENCIA / T.Strength / Resist Rad. N/mm2	LIMITE ELAST. / T.Strength / 0.2 % N/mm2	ALARGAM. / Elongation / Allongement Lat 4 d %	ESTRICCION / Red. Area / Striction %	RESILIENCIA / Impact test / Résilience / Joules	CHARPY V 10x10mm / Impact average / Moyenne	°C	DUREZA / Hardness / Dureté / HBW
22 P3TCA010		COUPLING 1 3000LB NPT A105N	NE	C99A3	500	314	28,70	53,60				158 165
22 P3TCA010		COUPLING 1 3000LB NPT A105N	NE	YA	510	314	31,80	59,60				148 157

COMPOSICION QUIMICA - STEEL MAKER'S LADLE ANALYSIS - ANALYSE CHIMIQUE

COLADA N.º / Heat No / N.º Coulée	C %	Si %	Mn %	P %	S %	Cr %	Ni %	Mo %	Nb %	V %	Cu %	Al %	Ti %	CEq %				Origin of Steel
C99A3	0,180	0,270	0,980	0,010	0,004	0,200	0,130	0,050	0,001	0,003	0,170	0,024	0,000	0,414				Italy
YA	0,180	0,220	0,850	0,014	0,007	0,080	0,060	0,010	0,001	0,002	0,140	0,028	0,000	0,353				Spain

(*) OBSERVACIONES: / Remarks / Observations: N_NORMALIZED AT 900 C AND ALLOWED TO COOL IN STILL AIR

- Las dimensiones y la condición superficial se hallaron satisfactorias.
- Dimension and surface condition were found acceptable.
- Les dimensions et états de surface sont satisfaisants.

- Los materiales citados cumplen las normas aplicables.
- Manufacturing requirements are satisfied.
- Les normes applicables sont respectées.

EL INSPECTOR
Works Inspector - L'Inspecteur

ULMA FORJA S. COOP.
Dpto. de Garantía de calidad
Quality Assurance Dept.

3/4" 3M SA105N COUPLING
HT# 4279
14-561-01-01

BOTH-WELL STEEL FITTINGS CO., LTD.

NO.303, REN-SIN ROAD, REN-WU DISTRICT, KAOHSIUNG CITY TAIWAN R.O.C.(81460)
TEL : (886)7-3711536, 3710497, 3720260 FAX : (886)7-3713864, 3713886
WEB SITE : http://www.bothwell.com.tw E-Mail : box@bothwell.com.tw

ISO 9001:2008 Management System
TÜVRheinland CERTIFIED
An ISO 9001:2008 Registered Manufacturer

MILL TEST & INSPECTION CERTIFICATE

ACCORDING TO EN 10204 3.1

CUSTOMER : CE FRANKLIN LTD,DIV.NOVWILSON CANADA ULC
CERT NO : 141381
ORDER NO : 7008239
INVOICE NO : 5200001719
L/C NO :
PAGE : 19
DATE : 05/10/2014
ORIGIN : TAIWAN

ITEM	RAW HEAT NO. HEAT CODE	QTY	DESC/GRADE OR SPECIFICATION NO. CHEMICAL COMPOSITION(%) MECHANICAL PROPERTIES. SUPPLIER.
62	339494 4279	206 PCS	FULL CPLG A105 3/4" 3000# NPT C:0.18 SI:0.21 MN:0.86 P:0.013 S:0.007 CU:0.13 CR:0.12 NI:0.04 MO:0.01 V:0.002 NB:0.002 CE:0.36 TS(KSI):78.0 YS 0.2%(KSI):45.0 EL(%):32.0 R.A.(%):67.0 HARDNESS1(HBW):143 HARDNESS2(HBW):144

REMARK :
THE MATERIAL SUPPLIED IDENTIFIED AS ASTM A105N -13, ASME SA105N-2013ED
THE FITTING SUPPLIED IDENTIFIED AS ASME B16.11 - 2011
THE PRODUCT SUPPLIED WAS INSPECTED IN ACCORDANCE WITH SPECIFICATION(SURFACE & DIM). : GOOD
STANDARD : CHEMICAL COMPOSITION(%) & MECHANICAL PROPERTIES.

	C	Si	Mn	P	S	Cu	Cr	Ni	Mo	V	Cb(Nb)
MIN	-	0.10	0.60	-	-	-	-	-	-	-	-
MAX	0.35	0.35	1.05	0.035	0.040	0.40	0.30	0.40	0.12	0.08	-
	N	Al	Ti	Zr	CE	TS(KSI)	YS 1.0%(KSI)	YS 0.2%(KSI)	EL(%)	R of A(%)	HARDNESS(HBW)
MIN	-				-	70		36	22	30	-
MAX	-				0.43	-		-	-	-	187

HEAT TREATMENT : NORMALIZED: 900°C(1652°F) A.C.
STEEL MAKING PROCESS : ELECTRIC FURNACE
CONFORMS TO NACE MR0175-09 /MR0103-12
CONFORMS TO NACE MR0175/ISO15156-2009/MR0103-2012

This Material Conforms to
ASME Section II Edition 2013
Initialed By:
Date: Jan 14/2015

WE CERTIFY THE ABOVE MENTIONED FITTINGS HAVE BEEN MANUFACTURED, SAMPLED, TESTED, AND INSPECTED IN ACCORDANCE WITH THE SPECIFICATIONS SHOWN

C. C. Huang
Q.C. MANAGER

C. L. Ko
INSPECTOR

2" 3M coupling SA 105 N
HT # JAUC
14-561-01

This Material Conforms to
ASME Section II Edition 2013
Initialed By: ⓒ
Date: JAN 14/2015

M.E.G.A.

INSPECTION CERTIFICATE
Certificato d'ispezione

REPORT N. / Rapporto N.	TC-013936-14-0001	Issued on / Emesso il	20/10/2014	Customer / Cliente	DNOW CANADA ULC
Revision / Revisione	0	According to / In accordo a	EN 10204:2005	Type / Tipo	3.1
					P.O. BOX 4395 STATION C
					CALGARY, ALBERTA, T2T 5N2 - CANADA

Job n. / Com. n. 13936 | Page n./ Pagina n. 2 of 6

Purchase order and project/Ordine e progetto: 25332437

DESCRIPTION / DESCRIZIONE

Test Prova	Item Pos.	Qty Q.tà	Customer code Codice cliente	Material Materiale	Heat Colata	Product Prodotto
LBTU	8	1000	3861	A/SA105-13	65926	BUSHING M/F NPT A/SA105N 3/4x1/4
JARU	9	7	3903	A/SA105-13	P4131341245	COUPLING S. 3000 NPT A/SA105N 1
JBDL	9	1008	3903	A/SA105-13	13/75978	COUPLING S. 3000 NPT A/SA105N 1
JAUC	12	1629	3906	A/SA105-13	111788	COUPLING S. 3000 NPT A/SA105N 2
JCLD	12	371	3906	A/SA105-13	112948	COUPLING S. 3000 NPT A/SA105N 2

Test Prova	HEAT TREATMENT DATA AND REFERENCES TO OTHER CERTIFICATES / Dettagli di trattamento termico e riferimenti ad altri certificati	RAW AND FORGING MATERIAL CERTIFICATES / Certificati di acciaieria/forgia
LBTU	MATERIAL PRODUCED BY ELECT.FURNACE-NORMALIZED AT 900 C COOLED IN STILL AIR.	CERT.2531.94SAN PAOLO*242015 MEGA
JARU	MATERIAL PRODUCED BY ELECT.FURNACE-NORMALIZED AT 900 C COOLED IN STILL AIR.	CERT.2013-100000054693.LUCCHINI*592059MEGA*
JBDL	MATERIAL PRODUCED BY ELECT.FURNACE-NORMALIZED AT 900 C COOLED IN STILL AIR.	CERT.19327.RIVA*0019MEGA*
JAUC	MATERIAL PRODUCED BY ELECT.FURNACE-NORMALIZED AT 920 C COOLED IN STILL AIR.	CERT.313945/1.TUBOS REUNIDOS*592510MEGA
JCLD	MATERIAL PRODUCED BY ELECT.FURNACE-NORMALIZED AT 920 C COOLED IN STILL AIR.	CERT.318279/1.TUBOS REUNIDOS*0005MEGA

Test Prova	Test loc. Preso a	Orient. Direz.	TENSILE TEST / Trazione: Specimen / Provino Shape Forma	A [mm²] Sezione	L [mm] Lungh.	Yield strength Snerv. [Mpa] Min:	Tensile strength Rottura [Mpa] Min:	Elongation Allung. [%] Min:	Red. Of Area Contraz. [%] Min:	CVN (KV) / Prova di resilienza: Dimens. Dimens. [mm]	T Temp. [°C]	Abs. Energy Energia ass. [J]	Shear A Area d [%]	Lat Exp Esp. Lat. [mm]	Bend Piega	Flatten. Schiacc.	Hardness Durezza [HBN]
LBTU	T/2	LONG	Round	30.100	25.000	343.000	535.000	28.200	64.500	10x10x55	0	62 - 60 - 64	--	--			170 - 176
JARU	T/2	LONG	Round	59.700	35.000	333.200	521.900	40.600	56.100	10x10x55	0	204 - 211 - 214	--	--			141 - 143
JBDL	T/2	LONG	Round	123.300	50.000	348.000	524.500	31.400	54.700	10x10x55	0	177 - 176 - 171	--	--			150 - 152
JAUC	T/2	LONG	Round	30.500	25.000	320.500	534.000	42.900	69.700	10x10x55	0	142 - 145 - 134	--	--			149 - 151
JCLD	T/2	LONG	Round	58.800	35.000	337.100	522.100	38.100	67.800	10x10x55	0	146 - 140 - 133	--	--			160 - 162

Test Prova	C [%]	Si [%]	Mn [%]	S [%]	P [%]	Cr [%]	Ni [%]	Mo [%]	Ti [%]	Cu [%]	V [%]	Al [%]	Co [%]	Nb [%]	N [%]	Sn [%]	W [%]	B [%]	Fe [%]	Zr [%]	CE[A] [%]	PREN[B] [%]	X fact.[C] [%]	J fact.[D] [%]
LBTU	0.1980	0.2260	0.8660	0.0160	0.0140	0.1630	0.1330	0.0360		0.2580	0.0040	0.0270		0.0030							0.4089			
JARU	0.1700	0.2400	1.0300	0.0030	0.0130	0.1550	0.0330	0.0070		0.0540	0.0030	0.0320		0.0016				0.0001			0.3804			
JBDL	0.1850	0.2200	0.9600	0.0100	0.0150	0.1600	0.0500	0.0100	0.0220	0.1600	0.0030	0.0250		0.0030		0.0070					0.3936			
JAUC	0.1800	0.2600	0.8300	0.0031	0.0140	0.0770	0.0750	0.0210		0.1810	0.0020			0.0010				0.0001			0.3553			
JCLD	0.1900	0.2400	0.8300	0.0043	0.0090	0.0690	0.0650	0.0180		0.1672	0.0015			0.0002				0.0001			0.3615			

REMARKS / Note

1: MATERIAL ACCORDING TO NACE MR0175/ISO 15156-1-2-3 Ed.2009. MATERIAL ACCORDING TO NACE MR0103 Ed.2012
2: FULLY KILLED STEEL AND FINE GRAIN TREATED

A: CE = C + Mn/6 + (Cr+Mo+V)/5 + (Cu+Ni)/15 | B: PREN = Cr + 3.3Mo + 16N
C: X factor = (10P + 5Sb+4Sn+As)/100 - elements expressed in ppm
D: J factor = ((Mn + Si)(P + Sn)) x 104

Quality inspector representative / Ispettore controllo qualità: Emmanuel Centemeri

This certificate is issued by a computerized system and it is valid with electronic signature. On the original certificate the trademark M.E.G.A. is printed in green color.

Form QC-01-01 Rev. 0 2013-03-15

HT# 83PK
1" x 6" XH Nipple SA 106B
14-561-01 3516

CapProducts, Ltd.
25 Winnipeg St
Vanastra, ON N0M 1L0

Phoenix * Capitol * Camco

CapProducts

Commanding a Higher Standard℠

Certified Mill Test Report

Printed: 12/4/2014
Certified: 07/24/2014

Customer
DistributionNOW (DNOW)
(formerly CE Franklin)
ACCOUNTS PAYBALE
PO BOX 4395 STATION C

P.O. 25369371
Tag

Heat No A1387
Heat Code 83PK
Phoenix Order # 1081719

Material ASTM A106-2011 / ASME SA106-2010 Edition

Part Number
15111012

Description
1 X 6" XHSML BLK NIPL

Chemical Properties

C	Mn	P	S	Si	Cu	Ni	Cr
0.1660	0.8700	0.0120	0.0050	0.2330	0.0070	0.0430	0.0230

C Eq. Long
0.3201

Mo	V	Co	Al	Cb	N	Pb	Sn	Ta	Ti
0.0040	0.0020		0.0260	0.0000					0.0020

Additional Chemical Properties

Cr + Cu + Ni
0.0730

Mechanical Properties

Tensile (PSI)	Yield (PSI)	Elong. % in 2 in. or 4D	R of A	HBW	HBW2
72,420	59,294	32.0%	0.0%	141	0

Charpy Minimum Impact - ft/lbs

Test 1	Test 2	Test 3	Average
N/A	N/A	N/A	N/A

* Hydro test passed. at 2500 psi.

* Bend test passed.

We hereby certify that these parts were manufactured, sampled, tested, and inspected in accordance with the product specifications stated and were found to meet the requirements.
We further certify that this material was inspected using independent inspectors conforming to the requirements of EN 10204 3.1. These products meet the requirements of the latest editions of NACE MR0175, NACE MR0103, and ISO 15156. No weld repair has been performed on these products. This material was not exposed to mercury or any other metal alloy that is liquid at ambient temperatures during processing or while in our possession.

Meets ASME SA 106 Grade B Requirements.

This Material Conforms to
ASME Section II Edition 2013
Initialed By: (W)
Date: Jan 14/2015

1" S80 SA106B pipe
HT# 14-100444

6103.

This Material Conforms to
ASME Section II Edition 2013
Initialed By: [illegible]
Date: Jan 16/2015

HENGYANG VALIN
STEEL TUBE CO.,LTD

MILL TEST REPORT

(ACCORDING TO EN10204 3.1)

Add: 10 Dalixincun, Hengyang City,Hunan,P.R.China P.C.:421001
Tel and Fax: +86 734 8873739
E-mail: hsiec@hysteeltube.com

CUSTOMER	CE FRANKLIN		CERTIFICATE NO.	YCHYST2014015-1	
CONTRACT NO.	2111001125-2	P.O.NO. PO.3364224-OR-2100-A (LOT B)	L/C NO.: 4FAHD5-00286	DATE: 2014-5-27	PAGE: 1/3
PRODUCT	SEAMLESS CARBON STEEL PIPE FOR OIL AND GAS USE.		DELIVERY CONDITION	N	
SPECIFICATION	SEE SPECIFICATION NOTE	HEAT TREATMENT			
GRADE	B		DIMENSIONS	1" x 0.179" x20FT	
TOTAL BUNDLES: 28	TOTAL PIECES: 2500	TOTAL LENGTH: 50020.00 ft		TOTAL WEIGHT: 49.368 mt	

NO.	LOT No.	HEAT No.	BUNDLES	PIECES	LENGTH ft	WEIGHT mt W1	TENSILE TEST ASTM A370 SAMPLE TYPE/ ORIENTATION / SIZE(mm/GAUGE LENGTH(mm):S\L\19\50 TS(psi)	YS(psi)	Rt0.5	EL(%)	R.A. (%)	YS/TS	COLD BENDING TEST
1	WZ1404-012	14-100444	28	2500	50020.00	49.368	70325 ✓	38425 ✓		32.5 ✓		0.55	ACCEPTABLE

NO.	IMPACT TEST NOTCH TYPE/ORIENTATION/TEMPERATURE(℃)/SIZE (mm): /// AK1 (J)	Av.(J)	% SHEAR AREA	LE	/// AK2 (J)	Av.(J)	% SHEAR AREA	LE	NON METALIC INCLUSION	GRAIN SIZE	HARDNESS TEST NACE MR0175 HV10
1	/				/						/190.0//////////

NOTES:
W1--THEORETICAL WEIGHT
W2--ACTUAL WEIGHT
NR--NORMALIZING ROLLED
AK1--ABSORB ENERGY FOR THE FIRST SET
SAMPLE ORIENTATION : L--LONGITUDINAL T--TRANSVERSE
SAMPLE TYPE: S--STRIP C-- CLUBBED F--FULL-SECTION
Q&T--QUENCHING AND TEMPERING
AK2--ABSORB ENERGY FOR THE SECOND SET
N--NORMALIZING
A--ANNEALING
Av.--AVERAGE
LE--SIDE EXPANSION
HE--HOT EXPANDED
HR--HOT ROLLED
N&T--NORMALIZING AND TEMPERING

HENGYANG VALIN STEEL TUBE CO., LTD. HUNAN CHINA

HENGYANG VALIN
STEEL TUBE CO.,LTD

Add: 10 Dalixincun, Hengyang City,Hunan,P.R.China
P.C.:421001
Tel and Fax: +86 734 8873739
E-mail: hsicc@hysteeltube.com

MILL TEST REPORT

(ACCORDING TO EN10204 3.1)

CUSTOMER	CE FRANKLIN			CERTIFICATE NO.	YCHYST2014015-1
CONTRACT NO.	2111001125-2	P.O.NO.	PO.3364224-OR-2100-A (LOT B) L/C NO.: 4FAHD5-00286	DATE:	2014-5-27 PAGE: 2/3
PRODUCT	SEAMLESS CARBON STEEL PIPE FOR OIL AND GAS USE.			DELIVERY CONDITION	N
SPECIFICATION	SEE SPECIFICATION NOTE		HEAT TREATMENT		
GRADE	B			DIMENSIONS	1" x 0.179" x20FT
TOTAL BUNDLES: 28		TOTAL PIECES: 2500	TOTAL LENGTH: 50020.00 ft	TOTAL WEIGHT:	49.368 mt

NO.	HEAT No. / LOT No.	Type	CHEMICAL COMPOSITION (%)																													
			C	Si	Mn	Cr	Mo	W	Cu	Ni	P	Al	Sn	As	Pb	Sb	Nb	Ti	Zr	N	Bi	S	V	B	Ca	CE	SUM1	SUM2	SUM3	R1	R2	R3
			*100			*1000																*10000				*100	*1000						
		P																														
	14-100444	H	✓21	✓24	✓51	✓30	✓28		✓10	✓10	✓28	43					39	13				✓70	✓129	2		31	91	51.9	64.9			2.4
1	WZ1404-012	P	22	26	52	31	30		10	10	26	39					40	14				71	38	3		32	85	43.8	57.8			2.4
	WZ1404-012	P	21	26	52	30	28		10	11	28	38					36	13				70	33	3		31	82	39.3	52.3			2.5
		H																														
		P																														
		P																														
		H																														
		P																														
		P																														
		H																														
		P																														
		P																														
		H																														
		P																														
		P																														

NON-DESTRUCTIVE TEST			
POSITION	PIPE BODY	PIPE END	END SURFACE(GROOVE)
NDT Type(Level)	ET		
LAMINAR			
TEST RESULT	ACCEPTABLE	N/A	N/A
RESIDUAL MAGNETISM		ACCEPTABLE	
UT THICKNESS MEASUREMENT		N/A	
HYDROSTATIC TEST Min(psi/s)	2500/6	ACCEPTABLE	

PE
ACCEPTABLE
VISUAL & DIMENSION
ACCEPTABLE
COATING
ACCEPTABLE

NOTES: H--HEAT ANALYSIS P--PRODUCT ANALYSIS CE--EQUIVALENT CARBON R--RATIO R1=Ca /S R2=N/N R3=Mn/C

CEIIW=C+Mn/6+(Cr+Mo+V)/5+(Cu+Ni)/15 CEPCM=C+Si/30+(Mn+Cr+Cu)/20+Ni/60+Mo/15+V/10+5*B SUM1=Cr+Cu+Mo+Ni+V SUM2=Nb+V SUM3=Nb+V+Ti

ET-ASTM E309 UT-ASTM E213 EMI-ASTM E570 MPI-ASTM E709

L4/L3/L2--ACCEPT LEVEL L4/L3/L2,NOTCH DEPTH IS 12.5% /10% /5% THE SPECIFIED WALL THICKNESS.

HUNAN CHINA

HENGYANG VALIN
STEEL TUBE CO.,LTD

MILL TEST REPORT

(ACCORDING TO EN10204 3.1)

Add: 10 Daibdncun, Hengyang
City,Hunan,P.R.China P.C.:421001
Tel and Fax: +86 734 8873739
E-mail: hsicc@hysteeltube.com

CUSTOMER	CE FRANKLIN			CERTIFICATE NO.	YCHYST2014015-1		
CONTRACT NO.	2111001125-2	P.O.NO.	PO.3364224-OR-2100-A (LOT B)	L/C NO.: 4FAHD5-00286	DATE: 2014-5-27	PAGE:	3/3
PRODUCT	SEAMLESS CARBON STEEL PIPE FOR OIL AND GAS USE.			DELIVERY CONDITION	N		
SPECIFICATION	SEE SPECIFICATION NOTE	HEAT TREATMENT					
GRADE	B			DIMENSIONS	1" x 0.179" x20FT		
TOTAL BUNDLES: 28	TOTAL PIECES: 2500		TOTAL LENGTH: 50020.00	ft	TOTAL WEIGHT: 49.368	mt	

REMARK: 1.ORIGIN:MADE IN CHINA;2.ALL ELEMENTS TO BE LISTED;

SPECIFICATION NOTE	ASTM A53B-2012/A106B-2013, ASME SA53B-2013/SA106B-2013, API 5LB, PSL1 45TH EDITION, NACE MR-0175-2011 (FOR HARDNESS ONLY)

We hereby certify that material herein described has been manufactured in accordance with the standards and specifications required in your order and satisfies the corresponding requirements.

This certificate is issued by a computerized system and it is valid with electronic signature. In case the owner of the certificate would release a copy of it ,he must attest its conformity to the original one taking upon himself the responsibility for any unlawful or not allowed use.

Any alteration and/or falsification will be subject to the law.

If you need to assure the authenticity of this certificate ,please do not hesitate to contact Hengyang Valin Steel Tube CO.,LTD, E-mail: hsicc@hysteeltube.com

CUSTOMER THIRD PARTY

Quality Manager:

Certificate-maker:

HENGYANG VALIN
STEEL TUBE CO.,LTD

MILL TEST REPORT

Add: 10 Dalixincun, Hengyang City,Hunan,P.R.China P.C.:421001
Tel and Fax: +86 734 8873739
E-mail: hsicc@hysteeltube.com

(ACCORDING TO EN10204 3.1)

CUSTOMER	DNOW CANADA ULC		CERTIFICATE NO.	YCHYST2014041-05	
CONTRACT NO.	2111001232-2	P.O.NO.	PO.25245891-A (LOT B) L/C NO.: 4FAHD5-00537	DATE: 2014-10-10	PAGE: 1/3
PRODUCT	SEAMLESS CARBON STEEL PIPE FOR OIL AND GAS USE.		DELIVERY CONDITION	NR	
SPECIFICATION	SEE SPECIFICATION NOTE		HEAT TREATMENT		
GRADE	B		DIMENSIONS	3/4" x 0.154" x 20FT	
TOTAL BUNDLES: 2	TOTAL PIECES: 267		TOTAL LENGTH: 5342.14 ft	TOTAL WEIGHT: 3.576 mt	

NO.	BATCH No.	HEAT No.	BUNDLES	PIECES	LENGTH ft	WEIGHT mt	TENSILE TEST ASTM A370 SAMPLE TYPE/ ORIENTATION / SIZE(mm/GAUGE LENGTH(mm):S\L\19\50						COLD BENDING TEST
						W1	TS(psi)	YS(psi)	RT0.5	EL(%)	R.A. (%)	YS/TS	
1	WL1405-015	14-202230	2	267	5342.14	3.576	70325	50750		34.0		0.72	ACCEPTABLE

NO.	IMPACT TEST NOTCH TYPE/ORIENTATION/TEMPERATURE(℃)/SIZE (mm) : ///				///				NON METALIC INCLUSION	GRAIN SIZE	HARDNESS TEST NACE MR0175 HV10
	AK1 (J)	Av.(J)	% SHEAR AREA	LE	AK2 (J)	Av.(J)	% SHEAR AREA	LE			
1	/				/						/154.0///////////

NOTES:
W1--THEORETICAL WEIGHT
W2--ACTUAL WEIGHT
NR--NORMALIZING ROLLED
AK1--ABSORB ENERGY FOR THE FIRST SET
SAMPLE ORIENTATION : L--LONGITUDINAL T--TRANSVERSE
SAMPLE TYPE: S---STRIP C-- CLUBBED F--FULL-SECTION
Q&T--QUENCHING AND TEMPERING
AK2--ABSORB ENERGY FOR THE SECOND SET
N--NORMALIZING
A--ANNEALING
Av.--AVERAGE
LE--SIDE EXPANSION
HE--HOT EXPANDED
HR--HOT ROLLED
N&T--NORMALIZING AND TEMPERING

HENGYANG VALIN STEEL TUBE CO.,LTD. HUNAN CHINA

3/4" SCH80 SA106B Pipe
H/T # 14-202230

HENGYANG VALIN
STEEL TUBE CO.,LTD

MILL TEST REPORT

Add: 10 Dalixincun, Hengyang City,Hunan,P.R.China P.C.:421001
Tel and Fax: +86 734 8873739
E-mail: hsicc@hysteeltube.com

(ACCORDING TO EN10204 3.1)

CUSTOMER	DNOW CANADA ULC			CERTIFICATE NO.	YCHYST2014041-05
CONTRACT NO.	2111001232-2	P.O.NO.	PO.25245891-A (LOT B) L/C NO.: 4FAHD5-00537	DATE:	2014-10-10 PAGE: 2/3
PRODUCT	SEAMLESS CARBON STEEL PIPE FOR OIL AND GAS USE.			DELIVERY CONDITION	NR
SPECIFICATION	SEE SPECIFICATION NOTE		HEAT TREATMENT		
GRADE	B			DIMENSIONS	3/4" x 0.154" x 20FT
TOTAL BUNDLES: 2		TOTAL PIECES: 267	TOTAL LENGTH: 5342.14 ft		TOTAL WEIGHT: 3.576 mt

NO.	HEAT No. / BATCH No.	Type	CHEMICAL COMPOSITION (%) C *100	Si	Mn	Cr	Mo	W	Cu	Ni	P	Al	Sn	As	Pb	Sb	Nb	Ti	Zr	N	Bi	S *10000	V	B	Ca	CE *100	SUM1 *1000	SUM2 *1000	SUM3	R1	R2	R3
	P																														
	14-202230	H	16	22	63	40	12		10	10	25																				
1	WL1405-015	P	17	21	62	30	14		10	10	21						1	1				80	13	3		28	73	2.3	3.3			
	WL1405-015	P	17	20	69	35	13		10	10	21						1	2				78	17	2		28	66	2.7	4.7			
		H															1	1				70	14	3		30	69	2.4	3.4			
		P																													
		P																													
		H																													
		P																													
		P																													
		H																													
		P																													
		P																													
		H																													
		P																													
		P																													

NON-DESTRUCTIVE TEST

POSITION	PIPE BODY	PIPE END	END SURFACE(GROOVE)	PE
NDT Type(Level)	ET/L4			ACCEPTABLE
LAMINAR				VISUAL & DIMENSION ACCEPTABLE
TEST RESULT	ACCEPTABLE	ACCEPTABLE	N/A	COATING ACCEPTABLE
RESIDUAL MAGNETISM	≤20 GS	ACCEPTABLE		
UT THICKNESS MEASUREMENT		N/A		
HYDROSTATIC TEST Min(psi/s)	2470/6	ACCEPTABLE		ACCEPTABLE

衡阳华菱钢管有限公司 HENGYANG VALIN STEEL TUBE CO., LTD. HUNAN CHINA

NOTES: H--HEAT ANALYSIS P--PRODUCT ANALYSIS CE--EQUIVALENT CARBON R--RATIO R1=Ca /S R2=Al /N
CEIIW=C+Mn/6+(Cr+Mo+V)/5+(Cu+Ni)/15 CEPCM=C+Si/30+(Mn+Cr+Cu)/20+Ni/60+Mo/15+V/10+5*B SUM1=Cr+Cu+Mo+Ni+V SUM2=Nb+V SUM3=Nb+V+Ti
ET-ISO10893-2-2011、UT-ISO10893-10-2011、MPI-ISO10893-5-2011、EMI-ISO10893-3-2011、WT-ISO10893-12-2011、LaminationT-ISO-10893-8-2011
L4/L3/L2--ACCEPT LEVEL L4/L3/L2,NOTCH DEPTH IS 12.5% /10% /5% THE SPECIFIED WALL THICKNESS.

HENGYANG VALIN
STEEL TUBE CO.,LTD

MILL TEST REPORT

Add: 10 Dalixincun, Hengyang
City,Hunan,P.R.China P.C.:421001
Tel and Fax: +86 734 8873739
E-mail: hsiec@hysteeltube.com

(ACCORDING TO EN10204 3.1)

CUSTOMER	DNOW CANADA ULC			CERTIFICATE NO.	YCHYST2014041-05
CONTRACT NO.	2111001232-2	P.O.NO.	PO.25245891-A (LOT B)	L/C NO.: 4FAHD5-00537	DATE: 2014-10-10 PAGE: 3/3
PRODUCT	SEAMLESS CARBON STEEL PIPE FOR OIL AND GAS USE.			DELIVERY CONDITION	NR
SPECIFICATION	SEE SPECIFICATION NOTE		HEAT TREATMENT		
GRADE	B				
TOTAL BUNDLES: 2		TOTAL PIECES: 267		DIMENSIONS	3/4" x 0.154" x 20FT
			TOTAL LENGTH: 5342.14 ft		TOTAL WEIGHT: 3.576 mt

REMARK : 1. ORIGIN:MADE IN CHINA 2. ALL ELEMENTS TO BE LISTED

SPECIFICATION NOTE	ASTM A53B-2012/A106B-2013, ASME SA53B-2013/SA106B-2013, API 5LB, PSL1 45TH EDITION, NACE MR-0175-2011 (FOR HARDNESS ONLY)	

We hereby certify that material herein described has been manufactured in accordance with the standards and specifications required in your order and satisfies the corresponding requirements.

This certificate is issued by a computerized system and it is valid with electronic signature. In case the owner of the certificate would release a copy of it ,he must attest its conformity to the original one taking upon himself the responsibility for any unlawful or not allowed use.

Any alteration and/or falsification will be subject to the law.

If you need to assure the authenticity of this certificate ,please do not hesitate to contact Hengyang Valin Steel Tube CO.,LTD, E-mail: hsiec@hysteeltube.com

CUSTOMER THIRD PARTY

Quality Manager:

HENGYANG VALIN STEEL TUBE CO., LTD. 衡阳华菱锡管有限公司 HUNAN CHINA

Certificate-maker: 唐娅娜

HENGYANG VALIN
STEEL TUBE CO.,LTD

MILL TEST REPORT

(ACCORDING TO EN10204 3.1)

Add: 10 Dalixincun, Hengyang City,Hunan,P.R.China P.C.:421001
Tel and Fax: +86 734 8873739
E-mail: hsiec@hysteeltube.com

CUSTOMER	DNOW CANADA ULC			CERTIFICATE NO.	C201422580-1
CONTRACT NO.	2111001233-1	P.O.NO.	PO.25245891-B (LOT A) L/C NO.: 4FAHD5-00530	DATE:	2014-7-18 PAGE: 1/3
PRODUCT	SEAMLESS CARBON STEEL PIPE FOR OIL AND GAS USE.			DELIVERY CONDITION	N
SPECIFICATION	SEE SPECIFICATION NOTE		HEAT TREATMENT		
GRADE	X42N,B,GRADE 290			DIMENSIONS	2" x 0.344" x 20FT
TOTAL BUNDLES:	22	TOTAL PIECES:	415	TOTAL LENGTH:	8305.44 ft TOTAL WEIGHT: 28.131 mt

NO.	BATCH No.	HEAT No.	BUNDLES	PIECES	LENGTH ft	WEIGHT mt W1	TENSILE TEST ASTM A370 SAMPLE TYPE/ ORIENTATION / SIZE(mm/GAUGE LENGTH(mm):S\L\19\50 TS(psi)	YS(psi)	RT0.5	EL(%)	R.A. (%)	YS/TS	COLD BENDING TEST
1	946300808	1423706V	5	96	1921.26	6.507	67715	50460		34.5		0.75	ACCEPTABLE
2	946300809	1423707V	6	103	2061.35	6.982	67280	50605		36.5		0.75	ACCEPTABLE
3	946300810	1423703V	8	156	3122.05	10.575	67570	50170		34.0		0.74	ACCEPTABLE
4	946300811	1412505V	3	60	1200.79	4.067	67280	50605		35.0		0.75	ACCEPTABLE

NO.	IMPACT TEST NOTCH TYPE/ORIENTATION/TEMPERATURE(℃)/SIZE (mm): /// AK1 (J)	Av.(J)	% SHEAR AREA	LE	/// AK2 (J)	Av.(J)	% SHEAR AREA	LE	NON METALIC INCLUSION	GRAIN SIZE	HARDNESS TEST NACE MR-0175/ISO 15156-2(REGION)/MR-0103 HV10
1	/				/						/167.0//////////
2	/				/						/166.5//////////
3	/				/						/170.7//////////
4	/				/						/170.0//////////

NOTES:
W1--THEORETICAL WEIGHT
W2--ACTUAL WEIGHT
NR--NORMALIZING ROLLED
AK1--ABSORB ENERGY FOR THE FIRST SET

SAMPLE ORIENTATION : L--LONGITUDINAL T--TRANSVERSE
SAMPLE TYPE: S---STRIP C-- CLUBBED F--FULL-SECTION
Q&T--QUENCHING AND TEMPERING
AK2--ABSORB ENERGY FOR THE SECOND SET

N--NORMALIZING
A--ANNEALING
Av.--AVERAGE
LE--SIDE EXPANSION

HE--HOT EXPANDED
HR--HOT ROLLED
N&T--NORMALIZING AND TEMPERING

HENGYANG VALIN STEEL TUBE CO.,LTD. HUNAN CHINA

2" SBO SA106B Pipe
HT # 1412505

HENGYANG VALIN
STEEL TUBE CO.,LTD

MILL TEST REPORT

Add: 10 Dalixincun, Hengyang City,Hunan,P.R.China P.C.:421001
Tel and Fax: +86 734 8873739
E-mail: hsiec@hysteeltube.com

(ACCORDING TO EN10204 3.1)

CUSTOMER	DNOW CANADA ULC			CERTIFICATE NO.	C201422580-1
CONTRACT NO.	2111001233-1	P.O.NO	PO.25245891-B (LOT A) L/C NO.: 4FAHD5-00530	DATE:	2014-7-18
PRODUCT	SEAMLESS CARBON STEEL PIPE FOR OIL AND GAS USE.			DELIVERY CONDITION	N
SPECIFICATION	SEE SPECIFICATION NOTE		HEAT TREATMENT		
GRADE	X42N,B,GRADE 290			DIMENSIONS	2" x 0.344" x 20FT
TOTAL BUNDLES: 22	TOTAL PIECES: 415	TOTAL LENGTH: 8305.44	ft	TOTAL WEIGHT:	28.131 mt

NO.	HEAT No. / BATCH No.	Type	CHEMICAL COMPOSITION (%)																														
			C	Si	Mn	Cr	Mo	W	Cu	Ni	P	Al	Sn	As	Pb	Sb	Nb	Ti	Zr	N	Bi	S	V	B	Ca	CE	SUM1	SUM2	SUM3	R1	R2	R3
			*100			*1000																*10000				*100		*1000					
		P																															
1	1423706V	H	12	30	105	46	5		83	25	10	33					30	27		4		25	38	1	18	31	162.8	33.8	60.8	0.7	8.3	8.8
	946300808	P	12	32	108	47	6		72	20	8	40					26	24		8		22	30	1	20	32	148	29	53	0.9	5.0	9.0
	946300808	P	12	32	109	46	6		72	19	8	40					27	24		8		24	31	1	19	32	146.1	30.1	54.1	0.8	5.0	9.1
2	1423707V	H	12	30	106	42	5		90	27	11	41					33	30		6		31	39	3	30	31	167.9	36.9	66.9	1.0	6.8	8.8
	946300809	P	12	31	108	46	7		71	22	8	41					26	24		8		27	26	1	25	32	148.6	28.6	52.6	0.9	5.1	9.0
	946300809	P	12	32	108	46	6		71	21	8	39					26	24		6		22	27	2	16	32	146.7	28.7	52.7	0.7	6.5	9.0
3	1423703V	H	12	28	105	39	5		82	23	10	32					30	27		6		32	52	1	5	31	154.2	35.2	62.2	0.2	5.3	8.8
	946300810	P	12	32	108	46	6		71	21	8	39					26	24		7		24	28	2	17	32	146.8	28.8	52.8	0.7	5.6	9.0
	946300810	P	12	31	107	46	6		70	21	8	39					26	24		7		22	27	3	15	32	145.7	28.7	52.7	0.7	5.6	8.9
4	1412505V	H	✓ 14	✓31	✓104	✓36	✓ 4		✓ 71	✓20	✓10	34					33	27		4		✓ 24	✓36	2	2	33	134.6	36.6	63.6	0.1	8.5	7.4
	946300811	P	12	31	107	47	7		72	21	8	39					26	24		7		25	28	2	20	32	149.8	28.8	52.8	0.8	5.6	8.9
	946300811	P	13	32	107	47	7		72	22	8	39					25	24		6		24	27	2	18	33	150.7	27.7	51.7	0.8	6.5	8.2
		H																														
		P																														
		P																														

NON-DESTRUCTIVE TEST

POSITION	PIPE BODY	PIPE END	END SURFACE(GROOVE)	BEVELLING
NDT Type(Level)	ET/L2	MPI		ACCEPTABLE
	UT/L2	UT/L2		VISUAL & DIMENSION
LAMINAR				ACCEPTABLE
TEST RESULT	ACCEPTABLE	ACCEPTABLE	N/A	COATING
RESIDUAL MAGNETISM	≤20 GS	ACCEPTABLE		
UT THICKNESS MEASUREMENT		N/A		
HYDROSTATIC TEST Min(psi/s)	3000/6	ACCEPTABLE		ACCEPTABLE

NOTES: H--HEAT ANALYSIS P--PRODUCT ANALYSIS CE--EQUIVALENT CARBON R--RATIO R1=Ca /S R2=Al /N R3=Nb/C
CEIIW=C+Mn/6+(Cr+Mo+V)/5+(Cu+Ni)/15 CEPCM=C+Si/30+(Mn+Cr+Cu)/20+Ni/60+Mo/15+V/10+5*B SUM1=Cr+Cu+Mo+Ni+V SUM2=Nb+V SUM3=Nb+V+Ti
ET-ISO10893-2-2011、UT-ISO10893-10-2011、MPI-ISO10893-5-2011、EMI-ISO10893-3-2011、WT-ISO10893-12-2011、LaminationT-ISO-10893-8-2011
L4/L3/L2--ACCEPT LEVEL L4/L3/L2,NOTCH DEPTH IS 12.5% /10% /5% THE SPECIFIED WALL THICKNESS.

HENGYANG VALIN
STEEL TUBE CO.,LTD

MILL TEST REPORT

(ACCORDING TO EN10204 3.1)

Add: 10 Dalixincun, Hengyang
City,Hunan,P.R.China P.C.:421001
Tel and Fax: +86 734 8873739
E-mail: hsiec@hysteeltube.com

CUSTOMER	DNOW CANADA ULC			CERTIFICATE NO.	C201422580-1
CONTRACT NO.	2111001233-1	P.O.NO.	PO.25245891-B (LOT A) L/C NO.: 4FAHD5-00530	DATE:	2014-7-18 PAGE: 3/3
PRODUCT	SEAMLESS CARBON STEEL PIPE FOR OIL AND GAS USE.			DELIVERY CONDITION	N
SPECIFICATION	SEE SPECIFICATION NOTE	HEAT TREATMENT			
GRADE	X42N,B,GRADE 290			DIMENSIONS	2" x 0.344" x 20FT
TOTAL BUNDLES: 22	TOTAL PIECES: 415	TOTAL LENGTH: 8305.44 ft		TOTAL WEIGHT: 28.131 mt	

REMARK: 1. ORIGIN:MADE IN CHINA 2. ALL ELEMENTS TO BE LISTED

SPECIFICATION NOTE	ASTM A53B-2012/A106B-2013, ASME SA53B/SA106B-2013, API 5LB/X42N, PSL-2 45TH EDITION, NACE MR-0175-2011/ISO 15156-2(REGION 3)-2009 /MR-0103-2012/SS (CSA Z245.1 GRADE 290 CATEGORY I-2014)

We hereby certify that material herein described has been manufactured in accordance with the standards and specifications required in your order and satisfies the corresponding requirements.

This certificate is issued by a computerized system and it is valid with electronic signature. In case the owner of the certificate would release a copy of it ,he must attest its conformity to the original one taking upon himself the responsibility for any unlawful or not allowed use.

Any alteration and/or falsification will be subject to the law.

If you need to assure the authenticity of this certificate ,please do not hesitate to contact Hengyang Valin Steel Tube CO.,LTD, E-mail: hsiec@hysteeltube.com

CUSTOMER THIRD PARTY

Quality Manager:

HENGYANG VALIN STEEL TUBE CO.,LTD
HUNAN CHINA

Certificate-maker: 唐娅娜

EVRAZ EVRAZ INC. NA

Test Certificate

Form TC1: Revision 1: Date 31 Oct 2000

Customer: VARSTEEL LTD. 330-220 4TH STREET SOUTH LETHBRIDGE AB T1J4J7	Customer P.O. No.: CTL CLOSE	Mill Order No.: 41-253110-12	Shipping Manifest: CT034236
	Product Description: CSA G40.21(2004)44W/300W / ASTM A36(05) A709(01A)36 ASME SA36(01ED)	Ship Date: 30 Jun 14 Cert Date: 30 Jun 14	Cert No: 051069064 (Page 1 of 1)
	Size: 0.500 X 48.00 X COIL (IN)		

Tested Pieces				Tensiles						Charpy Impact Tests										
Heat Id	Piece Id	Piece Dimensions	Tst Loc	YS (PSI)	UTS (PSI)	%RA	Elong % 2in	Elong % 8in	Tst Dir	Average Hardness	Abs. Energy(FTLB) 1	2	3	Avg	% Shear 1	2	3	Avg	Tst Tmp	Tst Dir	Tst Siz (mm)	BDWTT Tmp	BDWTT %Shr
496982	C0048	0.375 X 48.00 (CUT)	L	59175	70198		48	24	T														
			C	61206	73534		43	21	T														
496982	C0051	0.500 X 48.00 (CUT)	L	57435	69763		50	25	T														
			C	57725	70488		44	23	T														
515293	C0037	0.500 X 48.00 (CUT)	L	59030	71359		41	21	T														
			C	60626	74114		43	20	T														
515293	C0038	0.500 X 48.00 (CUT)	L	58885	71504		48	22	T														
			C	60481	73824		44	21	T														
515294	C0045	0.500 X 48.00 (CUT)	L	58450	70488		50	23	T														
			C	61496	73679		46	22	T														
515294	C0046	0.375 X 48.00 (CUT)	L	59901	70488		50	25	T														
			C	59030	71504		48	24	T														

Chemical Analysis

Heat Id	C	Mn	P	S	Si	Tot.Al	Cu	Ni	Cr	Mo	Cb	V	Ti	B	N	ORGN
496982	.06	.59	.011	.009	.14	.030	.28	.09	.09	.04	.023	.001	.001	.0001	.0068	CAN
515293	.06	.61	.012	.006	.15	.035	.35	.14	.12	.04	.024	.001	.002	.0001	.0066	CAN
515294	.06	.59	.013	.001	.13	.035	.30	.09	.13	.03	.022	.001	.001	.0000	.0082	CAN

MERCURY IS NOT A METALLURGICAL COMPONENT OF THE STEEL AND NO MERCURY WAS INTENTIONALLY ADDED
DURING THE MANUFACTURE OF THIS PRODUCT
HOT-ROLLED COIL INTENDED FOR CONVERSION TO GRADE. CERTIFIED TO CHEMISTRY ONLY.
ALL PHYSICAL TEST RESULTS, IF REPORTED, ARE FOR INFORMATION ONLY.

496982	C0050	PCES:	1, WGT:	39390	496982	C0051	PCES:	1, WGT:	39435
496982	C0052	PCES:	1, WGT:	37540	496982	C0053	PCES:	1, WGT:	39340
515293	C0036	PCES:	1, WGT:	38420	515294	C0043	PCES:	1, WGT:	38380

This Material Conforms to
ASME Section II Edition 2013
Initialed By:
Date: Sep 2-/2014

Cust Part # :

WE HEREBY CERTIFY THAT THIS MATERIAL WAS TESTED IN ACCORDANCE WITH THE APPROPRIATE SPECIFICATION

Approved By: Jason Wall
Quality Assurance Rep

Customer Name: ENLYN CORP
Customer PO#: 14-409
Shipper No: 712658
Heat Number: 496982
CUT PARTS

PO-14-561-01-21
HT # K2944
1" pipe Nipple (Swage) SA234WPB 3607

Material Test Report

Current Date: Thu, 23 Oct 2014 19:09:48 +0000

Report Number: 27656
Description: 1" SWAGES & BULL PLUGS
Specification: A234-WPB/SA234 WPB
Year of Revision:
Comment: NACE MR0103-07
MR0175/ISO 15156-2-03
Additional Comment:

Date: Wed, Mar 26th 2014
Heat Treatment: AS ROLLED
Material: C1022
CRN: 0A7470.5CR1

Chemical Analysis

Heat Code: K2944
Heat Number: NF14201211

C	0.180	Cu	0.140	Al	0.025
Mn	0.930	Ni	0.320	Ti	
P	0.007	Cr	0.090		
S	0.005	Mo	0.020		
Si	0.210	V	0.012		
N		Cb/Nb	0.002		

Carbon Equivalency Formula Used:
C+(Mn/6)+(Cr+Mo+V)/5+(Ni+Cu)/15
CE= 0.39

Mechanical Tests

Yield PSI: 54310
Tensile PSI: 74918
Elongation: 22 % @ 8"
Reduction of Area %
Size: 1.315" RND
Brinell Hardness: 149

Charpy Impact Test

Individual Values: (V1) ft/lbs (V2) ft/lbs (V3) ft/lbs

This Material Test Report meets DIN 50049/EN 10204 3.1 Standard

We hereby Certify that the material described has been tested in accordance with the specifications, and the results are correct as contained in the records of the Company.

Lisa Gildner, Q.A. Manager

KEDDCO

Sarnia
Toll Free: 1-866-511-1381
By regular telephone at: 519-336-2960
By fax at 519-344-3181

Mailing Address:
645 Keddco St.
Sarnia, ON
N7T 7H5

Edmonton
Toll Free: 1-877-465-0303
By regular telephone at: 780-465-0303
By fax at 780-465-0304

Mailing Address:
3911-76 Av.
Edmonton, AB
T6B 2S8

This Material Conforms to
ASME Section II Editior 2013
Initialed By:
Date: Feb 06/2015

PO-14-561-01-21

HT# W21662
HT# W21479

1 x 1/2" S80 swage SA234 WPB
1/2" x 1/4" S80 swage SA234 WPB

WESTBROOK

MATERIAL TEST REPORT

Page 1

PO Box 53591
Edmonton, AB T6X0P0

Voice 780 490 4976
Fax 780 490 0471

Sold To: DNOW CANADA ULC
Order No.: 116366 Order Date: 9/19/2014

Purchase Order: 657624821

Printed: 9/19/2014

Line: 1
Description: 1 X 1/2 S80 A234WPBN SP95 BLK CONC SWG TBE

****** Specifications - Heat Code W21662 ZE: ******
A105/A105M-09, SA105, A234-07 WPB, SA234 WPB, ASME B16.5, B16.9, B16.11, B16.36, MSS SP-25, SP-44, SP-79, SP-83, SP-95, API-605, A.W.W.A.
STARTING MATERIAL: BAR/BILLET/FORGING
A234-07 WPBN, SA234 WPBN

SAP 3606

Chemical Composition:

C:	Mn:	P:	S:	Si:	Cr:	Ni:	Mo:
0.200	0.950	0.009	0.004	0.230	0.090	0.290	0.020
Cu:	**V:**	**Al:**	**Cb:**	**Ti:**	**B:**	**C.E.:**	
0.110	0.011	0.027	0.003	<0.010	.0008	.409	

Mechanical Properties:

Tensile(PSI):	Yield(PSI):	Elong(%):	RA(%):	Hardness:
74000	49000	34.00	70.00	BHN 141-142

Comments:
Normalized.
Cold Drawn.
Meets Nace MR-01-75/2009, MR-01-03/2010 and ISO 15156/2009.

This Material Conforms to ASME Section II Edition 2013
Initialed By: Q
Date: Feb 06/2015

Line: 2
Description: 1/2 X 1/4 S80 A234WPBN SP95 BLK CONC SWG TBE

****** Specifications - Heat Code W21479 ZE: ******
A105/A105M-09, SA105, A234-07 WPB, SA234 WPB, ASME B16.5, B16.9, B16.11, B16.36, MSS SP-25, SP-44, SP-79, SP-83, SP-95, API-605, A.W.W.A.
STARTING MATERIAL: BAR/BILLET/FORGING
A234-07 WPBN, SA234 WPBN

SAP 3602.

Chemical Composition:

C:	Mn:	P:	S:	Si:	Cr:	Ni:	Mo:
0.230	0.610	0.024	0.009	0.200	0.100	0.050	0.012
Cu:	**V:**	**Cb:**	**C.E.:**				
0.130	0.004	0.008	.366				

Mechanical Properties:

Tensile(PSI):	Yield(PSI):	Elong(%):	RA(%):	Hardness:
73244	39885	32.00	62.50	HRB 75

Comments:
Normalized at 1600F for 10-15 minutes then still air cooled.
Cold drawn.
Meets Nace MR-01-75/2009, MR-01-03/2010 and ISO 15156/2009.

This Material Conforms to ASME Section II Edition 2013
Initialed By: Q
Date: Feb 06/2015

We hereby certify that the contents of this Material Test Report are correct and accurate to the best of our knowledge and belief, that all test results are in compliance with the material specifications and that all material meets the dimensional requirements of the order. The products described have not come into contact with mercury or any of its components. Westbrook's USA Quality System is registered to ISO 9001, Certificate No. 32813. This document is in accordance with EN10204:2004 3.1 / DIN50049 3.1B and was electronically transmitted. This inspection certificate is issued under the authority of Westbrook Mfg's Quality Control Manager.

Customer Name	Customer PO#	Shipper No	Heat Number
ENLYN CORP	14-561-01-03	758362	184695

1.5" x 1.5" x 0.188 HSS

Atlas Tube (U.S.) Inc.
13101 Eckles Road
Plymouth, Michigan, USA
48170
Tel: 313-454-5600
Fax: 313-454-1474

Atlas Tube
JMC STEEL GROUP

Ref.B/L: 80637265
Date: 11.21.2014
Customer: 1924

MATERIAL TEST REPORT

Sold to

Varsteel Red Deer Ltd.
292-28042 Hwy 11 Red Deer C
RED DEER AB T4S 2L4
CANADA

Shipped to

Varsteel Red Deer Ltd.
292-28042 Hwy 11 Red Deer C
RED DEER AB T4S 2L4
CANADA

Material: 1.5x1.5x188x24'0"0(8x8).-CSA-D Material No: 0150151882400-DCSA Made in: USA Melted in: USA

Sales order: 953508 Purchase Order: RD-981246 (FD)

Heat No	C	Mn	P	S	Si	Al	Cu	Cb	Mo	Ni	Cr	V	Ti	B	N
S69025	0.170	0.740	0.015	0.010	0.010	0.052	0.040	0.000	0.006	0.020	0.070	0.000	0.000	0.000	0.005

Bundle No	PCs	Yield	Tensile	Eln.2in	Certification	CE: 0.31
M300806332	57	069800 Psi	083600 Psi	32.2 %	CSA G40.21-13 50W CLASS C	

Material Note:
Sales Or.Note:

Material: 1.5x1.5x188x24'0"0(8x8).-CSA-D Material No: 0150151882400-DCSA Made in: USA Melted in: USA

Sales order: 953508 Purchase Order: RD-981246 (FD)

Heat No	C	Mn	P	S	Si	Al	Cu	Cb	Mo	Ni	Cr	V	Ti	B	N
[illegible]1	0.200	0.700	0.010	0.015	0.008	0.050	0.040	0.000	0.005	0.010	0.050	0.000	0.000	0.000	0.005

Bundle No	PCs	Yield	Tensile	Eln.2in	Certification	CE: 0.33
M300806332	7	059845 Psi	067958 Psi	23.1 %	CSA G40.21-13 50W CLASS C	

Material Note:
Sales Or.Note:

Material: 1.5x1.5x188x24'0"0(8x8).-CSA-D Material No: 0150151882400-DCSA Made in: USA Melted in: USA

Sales order: 958147 Purchase Order: RD-983819 (NOV)

Heat No	C	Mn	P	S	Si	Al	Cu	Cb	Mo	Ni	Cr	V	Ti	B	N
184695	0.200	0.520	0.010	0.004	0.020	0.030	0.120	0.000	0.010	0.070	0.070	0.000	0.000	0.000	0.006

Bundle No	PCs	Yield	Tensile	Eln.2in	Certification	CE: 0.32
M300806328	64	071155 Psi	075915 Psi	22.2 %	CSA G40.21-13 50W CLASS C	

Material Note:
Sales Or.Note:

Marvin Phillips

Authorized by Quality Assurance:
The results reported on this report represent the actual attributes of the material furnished and indicate full compliance with all applicable specification and contract requirements.
CE calculated using the AWS D1.1 method.

Steel Tube Institute of North America

Metals Service Center Institute

Customer Name	Customer PO#	Shipper No	Heat Number
ENLYN CORP	14-561-01-03	758362	SE14105755

1/4" x 2" A36 Flat plate

NUCOR STEEL SEATTLE, INC.

Mill Certification
11/21/2014

MTR #: 0000031224
Nucor Bar Mill Group
2424 SW Andover
SEATTLE, WA 98106-1100
(206) 933-2222
Fax: (206) 933-2207

Sold To: VARSTEEL CO LTD-RED DEER
#330, 220-4 ST SO
LETHBRIDGE AB T1J 4J7
CANADA
(403) 340-8377
Fax: (403) 327-6637

Ship To: VARSTEEL CO LTD
292-28042 HIGHWAY 11
RED DEER COUNTY
RED DEER AB T4S 2L4
CANADA
(403) 340-8377
Fax: (403) 314-1931

Customer P.O.	RD-983999	Sales Order	317110.2
Product Group	Merchant Bar Quality	Part Number	5325020024004W0
Grade	A36/A529GR50/CSA44W/50W	Lot #	SE1410575501
Size	1/4x2" Flat	Heat #	SE14105755
Product	1/4x2" Flat 20' A36/A529-50/44W/50W	B.L. Number	S1-477156
Description	A36/A529-50/44W/50W	Load Number	S1-307283
Customer Spec		Customer Part #	

I hereby certify that the material described herein has been manufactured in accordance with the specifications and standards listed above and that it satisfies those requirements.

Roll Date: 11/14/2014 **Melt Date: 11/12/2014** **Qty Shipped LBS: 14,697** **Qty Shipped Pcs: 432**

ASTM A36/A36M-12, A709/709M-13 GR36, ASME SA36-10 Ed '11 Ad.
ASME SA36-2010 EDITION-2011 ADDENDA
ASTM A709/A709M-13 GR 36 [250]

C	Mn	P	S	Si	Cu	Ni	Cr	Mo	V	Cb
0.16%	0.95%	0.012%	0.043%	0.19%	0.34%	0.11%	0.10%	0.028%	0.0130%	0.002%

Yield 1: 52,024psi	Tensile 1: 72,813psi	Elongation: 28.9% in 8"(% in 203.3mm)
Yield 2: 52,798psi	Tensile 2: 73,014psi	Elongation 26.6% in 8"(% in 203.3mm)

Specification Comments: MEETS THE REQUIREMENTS OF ASTM A36/A36M-12, ASTM A529/529M-05 GR50, CSA G40.21-13 GR44W(300W)/GR50W(350W). MEETS REPORTING REQUIREMENTS OF EN10204 SEC 3.1

ALL MANUFACTURING PROCESSES OF THE STEEL MATERIALS IN THIS PRODUCT, INCLUDING MELTING, HAVE OCCURRED WITHIN THE UNITED STATES. ALL PRODUCTS PRODUCED ARE WELD FREE. MERCURY, IN ANY FORM, HAS NOT BEEN USED IN THE PRODUCTION OR TESTING OF THIS MATERIAL.

Erik Nissen
Division Metallurgist

Customer plate | Customer PO# | Shipper No | Heat Number

NASA CORP | 14-561 01-03 | 758362 | 52065987

5/4" Arc Bend Bar

CERTIFIED MATERIAL TEST REPORT

GERDAU

[illegible] AVE. CAMBRIDGE
[illegible] PLACE
CAMBRIDGE, ON N1T 1B9
[illegible]

[illegible]	CUSTOMER [illegible]
VARSTEEL LTD	VARSTEEL LTD
[illegible] AVENUE	[illegible]
[illegible]	[illegible]
Canada	Canada

GRADE	SHIP [illegible]
[illegible]	[illegible]

LENGTH	WEIGHT	[illegible]
[illegible]	[illegible]	52065987 [illegible]

SALES ORDER	CUSTOMER [illegible]
[illegible]	

SPECIFICATION [illegible] REVISION
[illegible]

CUSTOMER PURCHASE ORDER NUMBER	BILL OF LADING	DATE
[illegible]	[illegible]	[illegible]

CHEMICAL COMPOSITION

C	Mn	P	S	Si	Cu	Ni	[illegible]	Mo
0.12	0.81	0.016	0.025	0.17	0.32	0.11	0.08	0.03[illegible]

MECHANICAL PROPERTIES

Elong. %	G.L. inch	G.L. mm	UTS PSI	UTS MPa	YS PSI
24.00	8.000	200.0	[illegible]	[illegible]	52222
24.00	8.000	200.0	[illegible]	[illegible]	51477

MECHANICAL PROPERTIES

YS MPa
360
355

CHEMICAL NOTES

[illegible] specifications

The [illegible] are certified chemical and physical test records as contained in the [illegible] company. [illegible] Canada [illegible] complies with EN 10 204 3.1

[illegible]

Customer Name	Customer PO#	Shipper No	Heat Number
[illegible] CORP	14 561-01-03	758362	T84318

[illegible] 25 x 4 125 USA

From: 1 JIM 9503107 Page: 4/2 Date: 11/19/2014 2:26:16 PM

Atlas ABC Corp (Atlas Tube Division)
1855 East 122nd Street
Chicago, Illinois USA
60633
Tel: 773.646.4500
Fax: 773.646.6128

Atlas Tube
JMC STEEL GROUP

Ref.B/L: S063365
Date: 11.19.2014
Customer: 1924

MATERIAL TEST REPORT

Sold to

Varsteel Red Deer Ltd.
292-28042 Hwy 11 Red De
RED DEER AB T4S 2L4
CANADA

Shipped to

Varsteel Red Deer Ltd.
292-28042 Hwy 11 Red De
RED DEER AB T4S 2L4
CANADA

Material: 1.25x1.25x125x24'0"0/10x10/. Material No: 120121252400 Made in: USA Melted in: USA

Sales order: 958140 Purchase Order: RD 983819 (NOV)

Heat No	C	Mn	P	S	Si	Al	Cu	Cb	Mo	Ni	Cr	V	Ti	B	N
T84318	0.170	0.480	0.016	0.012	0.021	0.040	0.030	0.004	0.005	0.010	0.040	0.001	0.001	0.0000	0.003

Bundle No	PCs	Yield	Tensile	Eln.2in	Certification	CE: 0.27
M600167912	100	071000 Psi	076700 Psi	30 %	ASTM A500-13 GRADE B&C	

Material Note:
Sales Or.Note:

Material: 1.25x1.25x125x24'0"0/10x10/. Material No: 120121252400 Made in: USA Melted in: USA

Sales order: 958140 Purchase Order: RD-983819 (NOV)

Heat No	C	Mn	P	S	Si	Al	Cu	Cb	Mo	Ni	Cr	V	Ti	B	N
[illegible]	0.180	0.490	0.021	0.007	0.018	0.040	0.050	0.004	0.004	0.010	0.040	0.001	0.001	0.0000	0.003

Bundle No	PCs	Yield	Tensile	Eln.2in	Certification	CE: 0.28
M600168829	100	072600 Psi	077800 Psi	31 %	ASTM A500-13 GRADE B&C	

Material Note:
Sales Or.Note:

Material: 1.5x1.5x100x240 GR50/B/ Material No: 150151002400 Made in: USA Melted in: USA

Sales order: 946512 Purchase Order: RD-981246 (FD)

Heat No	C	Mn	P	S	Si	Al	Cu	Cb	Mo	Ni	Cr	V	Ti	B	N
[illegible]	0.170	0.480	0.016	0.011	0.013	0.034	0.030	0.005	0.003	0.010	0.040	0.001	[illegible]	[illegible]	[illegible]

Bundle No	PCs	Yield	Tensile	Eln.2in	Certification	CE: 0.26
M600168589	64	068560 Psi	077790 Psi	24 %	ASTM A500-13 GRADE B&C	

Material Note:
Sales Or.Note:

[illegible]

Authorized by Quality Assurance:
The results reported on this report represent the actual attributes of the material furnished and indicate full compliance with all applicable specification and contract requirements.
[illegible] qualified welders per the AWS D1.1 method.

Steel Tube Institute of North America

Metals Service Center Institute

Customer Name	Customer PO#	Shipper No	Heat Number
ENLYN CORP	14-561-01-03	758362	SE14105533

1.5" x 1.5" x 3/16 A36 Angle

NUCOR
NUCOR STEEL SEATTLE, INC.

Mill Certification
11/22/2014

MTR #: 0000031372
Nucor Bar Mill Group
2424 SW Andover
SEATTLE, WA 98106-1100
(206) 933-2222
Fax: (206) 933-2207

Sold To: VARSTEEL CO LTD-RED DEER
#330, 220-4 ST SO
LETHBRIDGE AB T1J 4J7
CANADA
(403) 340-8377
Fax: (403) 327-6637

Ship To: VARSTEEL CO LTD
292-28042 HIGHWAY 11
RED DEER COUNTY
RED DEER AB T4S 2L4
CANADA
(403) 340-8377
Fax: (403) 314-1931

Customer P.O.	RD-983916	Sales Order	316958.1
Product Group	Merchant Bar Quality	Part Number	2015018824004W0
Grade	A36/A529GR50/CSA44W/50W	Lot #	SE1410553302
Size	1-1/2X1-1/2X3/16 Angle	Heat #	SE14105533
Product	1-1/2X1-1/2X3/16 Angle 20' A36/A529-50/44W/50W	B.L. Number	S1-477227
Description	A36/A529-50/44W/50W	Load Number	S1-307284
Customer Spec		Customer Part #	

I hereby certify that the material described herein has been manufactured in accordance with the specifications and standards listed above and that it satisfies those requirements.

Roll Date: 11/5/2014 **Melt Date: 11/1/2014** **Qty Shipped LBS: 5,148** **Qty Shipped Pcs: 143**

C	Mn	P	S	Si	Cu	Ni	Cr	Mo	V	Cb
0.18%	0.89%	0.013%	0.039%	0.20%	0.29%	0.08%	0.09%	0.014%	0.0100%	0.003%

Yield 1: 52,797psi Tensile 1: 73,765psi Elongation: 28.1% in 8"(% in 203.3mm)

Yield 2: 53,521psi Tensile 2: 73,988psi Elongation 28.9% in 8"(% in 203.3mm)

Specification Comments: MEETS THE REQUIREMENTS OF ASTM A36/A36M-12, ASTM A529/529M-05 GR50, CSA G40.21-13 44W(300W)/GR50W(350W). MEETS REPORTING REQUIREMENTS OF EN10204 SEC 3.1

ALL MANUFACTURING PROCESSES OF THE STEEL MATERIALS IN THIS PRODUCT, INCLUDING MELTING, HAVE OCCURRED WITHIN THE UNITED STATES. ALL PRODUCTS PRODUCED ARE WELD FREE. MERCURY, IN ANY FORM, HAS NOT BEEN USED IN THE PRODUCTION OR TESTING OF THIS MATERIAL.

Erik Nissen
Division Metallurgist

FORTUNE INDUSTRIES (DALIAN), INC.

No 9 Longan Road Ganjingzi District, DALIAN, CHINA, 116113

CERTIFICATE OF CONFORMANCE TO EN10204 3.1

CUSTOMER:	FUSION	P/O#	17000420	Sheet #	1 of 4

VALVE INFORMATION

DESCRIPTION	Ball Valve	MODEL NUMBER	311FR030R01N1HR
SIZE	3" RP RF	SERIAL #	FGWU---FHEF
CLASS	CLASS 150	QUANTITY	180

PRESSURE TEST RESULTS

TEST PREFORMED:	HYDRO SHELL TEST	HYDRO SEAT TEST	AIR SEAT TEST
TEST PRESSURE IN PSI:	430 PSI	314 PSI	80PSI
DURATION IN MINUTES:	2	2	2
TEST ACCEPTED:	PASS	PASS	PASS
CUSTOMER INSPECTION:			

We hereby certify that material described above are true & correct to the best of our knowledge & comply with the material specification of the purchase order.

Material of construction in compliance with NACE MR0175-09/ISO 15156-09, NACE MR0103-10. Product In Compliance with API 6D-08, API 607-05, CSA Z245.15-09 SOUR

VISUAL INSPECTION TO MSS SP55-11 ACCEPTED

HYDROTESTING TO API 6D-08.

API Spec Q1 & ISO 9001: 2008 Registered quality systems CSA compliant in Canada.

THIS CERTIFICATE IS PRODUCED ELECTRONICALLY AND IS VALID WITHOUT SIGNATURE

SPECIAL INSTRUCTIONS / CUSTOMER HOLD POINTS	AUTHORIZED SIGNATURE:
	Q.A Summer
	DATE: Dec. 19 2013
	FI-R34-01-09

宋新民

FORTUNE INDUSTRIES (DALIAN), INC.

9# Longan Road, Ganjingzi District, Dalian, China

MATERIAL TEST REPORT TO EN 10204 3.1

Customer:	FUSION	P/O#	17000420	Model #	311FR030R01N1HR	Ref #	FIQ20131219
Description:	BV 3" RP Class 150 RF	QTY	180	Date:	2013-12-19	Page:	2/4

Material		Chemical Composition(%)										Mechanical Properties				
ASTM A216-12 WCB		C	Si	Mn	S	P	Cr	Ni	Mo	V	Cu	Yield Strength	Tensile Strength	Elongation	Reduction of Area	Hardness
Part Name	Heat No.	max 0.30	max 0.60	max 1.00	max 0.045	max 0.040	max 0.50	max 0.50	max 0.20	max 0.03	max 0.30	σs (Mpa) min250	σb (Mpa) 485~655	δ(%) min22	Ψ(%) min35	HBW max237
BODY	0CGT1	0.21	0.39	0.89	0.025	0.033	0.05	0.05	0.03	0.01	0.00	380	575	26	40	170
	2AKI1	0.21	0.30	0.95	0.005	0.022	0.04	0.03	0.02	0.01	0.00	390	585	29	45	156
	2BDL1	0.23	0.33	0.97	0.004	0.024	0.03	0.03	0.02	0.01	0.00	395	585	29	45	149
	2BDP1	0.20	0.34	0.96	0.002	0.020	0.04	0.03	0.02	0.01	0.00	395	585	29	45	149
	2CFT1	0.22	0.33	0.90	0.010	0.026	0.04	0.04	0.02	0.01	0.01	330	550	32	42	137
	2CHB1	0.24	0.33	0.90	0.011	0.026	0.06	0.06	0.03	0.01	0.10	385	615	32	47	126
	2CHE1	0.26	0.36	0.98	0.010	0.026	0.06	0.05	0.03	0.01	0.08	380	600	31	51	146
	2CHV1	0.25	0.32	0.98	0.011	0.027	0.04	0.04	0.02	0.01	0.00	370	585	30	47	146
	2CHW1	0.24	0.32	0.96	0.011	0.027	0.04	0.04	0.02	0.01	0.01	375	590	30	48	126
	2CIC1	0.24	0.33	0.86	0.013	0.029	0.04	0.04	0.02	0.01	0.00	380	600	31	52	143
	2CIE1	0.24	0.32	0.98	0.010	0.025	0.05	0.05	0.02	0.01	0.02	390	600	30	48	137
	2CIF1	0.26	0.36	1.00	0.011	0.028	0.04	0.04	0.02	0.01	0.01	390	590	31	53	146
	2CII1	0.24	0.34	0.94	0.012	0.028	0.04	0.04	0.02	0.01	0.00	365	580	32	55	143
	2CIK1	0.24	0.30	0.92	0.012	0.029	0.04	0.04	0.02	0.01	0.00	350	570	32	49	146
	2CJK1	0.23	0.33	0.84	0.011	0.027	0.04	0.04	0.02	0.01	0.00	360	590	31	52	149
	2CJR1	0.24	0.30	0.96	0.009	0.028	0.04	0.04	0.02	0.01	0.00	380	585	32	53	149
	2CJV1	0.23	0.32	0.94	0.009	0.027	0.04	0.04	0.02	0.01	0.00	370	570	27	44	140
	2CLA1	0.24	0.30	0.99	0.009	0.027	0.06	0.05	0.02	0.01	0.00	335	545	30	44	149
	2CLF1	0.25	0.32	1.00	0.008	0.027	0.04	0.04	0.02	0.01	0.00	345	555	32	45	140
	2CLP1	0.22	0.38	0.91	0.009	0.027	0.03	0.03	0.02	0.01	0.00	375	580	33	56	146
	2CLT1	0.20	0.31	0.85	0.009	0.027	0.03	0.03	0.02	0.01	0.00	355	560	31	52	140
	2COB1	0.22	0.41	0.95	0.017	0.033	0.03	0.04	0.02	0.01	0.00	365	560	25	47	126
	2COD1	0.21	0.33	1.00	0.017	0.033	0.03	0.04	0.02	0.01	0.00	360	575	28	44	126
	2COM1	0.23	0.32	0.95	0.018	0.033	0.03	0.04	0.02	0.01	0.00	350	545	30	52	131
	2CPH1	0.22	0.34	0.97	0.017	0.031	0.03	0.04	0.03	0.01	0.00	360	565	32	54	140
	2CPM1	0.23	0.34	0.98	0.021	0.034	0.03	0.04	0.03	0.01	0.00	370	570	29	48	140
	2CPN1	0.22	0.37	0.91	0.020	0.031	0.03	0.04	0.03	0.01	0.00	365	555	31	52	143
	2CPO1	0.20	0.31	0.92	0.019	0.031	0.03	0.04	0.02	0.01	0.00	380	570	30	54	137
	2CPP1	0.22	0.31	0.99	0.021	0.032	0.03	0.04	0.03	0.01	0.00	355	570	32	50	140
	2CPR1	0.24	0.33	1.00	0.021	0.032	0.03	0.04	0.03	0.01	0.00	365	565	31	53	137
	2CPW1	0.21	0.31	0.97	0.020	0.031	0.03	0.04	0.03	0.01	0.00	370	560	33	51	128
	2CPZ1	0.21	0.35	0.92	0.017	0.031	0.03	0.04	0.02	0.01	0.00	325	545	30	48	137
	2CRA1	0.22	0.37	0.97	0.017	0.032	0.03	0.04	0.02	0.01	0.00	335	550	31	52	140
	2CRC1	0.21	0.33	0.96	0.018	0.031	0.03	0.04	0.02	0.01	0.00	325	560	31	54	140
	2CRL1	0.23	0.35	0.94	0.018	0.033	0.03	0.04	0.03	0.01	0.00	360	555	31	53	140

Heat Treatment	
	Anneal:
	Normalizing: 900℃
	Quenching:
	Tempering:
	Solid Solution:

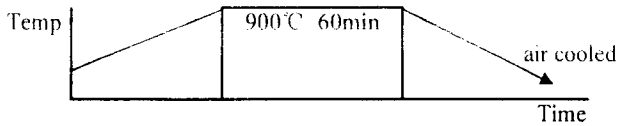

All material listed are in compliance with ISO 15156-09 & NACE MR0103-10. Product in compliance with API 6D-08, API 607-05 CSA Z245.15-09 SOUR

Witness / reviewed by customer rep.

We hereby certify that materials described above are true & correct to the best of our knowledge & comply with the material specification of the purchase order.

Q.A Summer

FORTUNE INDUSTRIES (DALIAN), INC.

9# Longan Road, Ganjingzi District, Dalian, China

MATERIAL TEST REPORT TO EN 10204 3.1

Customer:	FUSION	P/O#	17000420	Model #	311FR030R01N1HR	Ref #	FIQ20131219
Description:	BV 3" RP Class 150 RF	QTY	180	Date:	2013-12-19	Page:	3/4

Material		Chemical Composition(%)										Mechanical Properties				
ASTM A216-12 WCB		C	Si	Mn	S	P	Cr	Ni	Mo	V	Cu	Yield Strength	Tensile Strength	Elongation	Reduction of Area	Hardness
Part Name	Heat No.	max 0.30	max 0.60	max 1.00	max 0.045	max 0.040	max 0.50	max 0.50	max 0.20	max 0.03	max 0.30	σs (Mpa) min250	σb (Mpa) 485~655	δ(%) min22	Ψ(%) min35	HBW max237
BODY	2CRM1	0.23	0.38	0.88	0.021	0.036	0.03	0.04	0.02	0.01	0.00	365	565	31	55	143
	2CRO1	0.23	0.32	0.94	0.017	0.030	0.03	0.04	0.02	0.01	0.00	320	515	31	55	137
	2CRP1	0.22	0.33	0.87	0.024	0.034	0.05	0.05	0.04	0.01	0.00	320	510	31	52	137
	2CRR1	0.24	0.36	0.99	0.025	0.035	0.03	0.04	0.03	0.01	0.00	315	510	34	58	152
	2CSF1	0.22	0.33	0.97	0.018	0.033	0.04	0.05	0.03	0.01	0.00	330	550	31	52	143
	2CSH1	0.24	0.43	0.97	0.017	0.033	0.04	0.04	0.03	0.01	0.00	335	560	29	54	128
	2CSK1	0.23	0.42	0.93	0.015	0.034	0.03	0.04	0.02	0.01	0.00	345	565	30	52	140
	2DKG1	0.22	0.34	0.98	0.007	0.020	0.04	0.03	0.02	0.01	0.00	330	530	34	58	140
	2DKI1	0.20	0.35	1.00	0.008	0.020	0.05	0.03	0.02	0.01	0.00	335	540	32	54	156
	2DKM1	0.19	0.33	0.94	0.008	0.020	0.05	0.05	0.03	0.01	0.04	370	570	31	50	143
	2DKP1	0.20	0.33	1.00	0.011	0.027	0.04	0.04	0.02	0.01	0.00	335	535	30	57	137
	2DKY1	0.20	0.31	0.95	0.010	0.028	0.04	0.03	0.02	0.01	0.00	370	570	32	53	137
	3OAI1	0.24	0.41	1.00	0.018	0.028	0.04	0.03	0.01	0.01	0.01	380	590	31	52	159
	3OAS1	0.27	0.41	0.99	0.017	0.027	0.04	0.03	0.01	0.01	0.01	375	585	30	50	168
	3OAU1	0.23	0.46	0.99	0.017	0.028	0.04	0.03	0.01	0.00	0.01	370	585	35	55	172
	3OAV1	0.24	0.49	1.00	0.017	0.027	0.03	0.03	0.01	0.01	0.01	370	590	30	50	168
	3OAZ1	0.23	0.48	0.97	0.017	0.029	0.03	0.04	0.01	0.01	0.01	360	555	35	55	162
	3OBA1	0.25	0.36	0.92	0.018	0.029	0.05	0.05	0.01	0.01	0.01	365	565	30	50	160
	3OBC1	0.25	0.46	0.93	0.017	0.028	0.04	0.04	0.01	0.00	0.01	365	570	32	50	160
	T0091	0.23	0.43	0.95	0.006	0.026	0.07	0.05	0.02	0.01	0.00	355	570	32	57	140

Material		Chemical Composition(%)										Mechanical Properties				
ASTM A105N-11		C	Si	Mn	S	P	Cr	Ni	Mo	V	Cu	Yield Strength	Tensile Strength	Elongation	Reduction of Area	Hardness
Part Name	Heat No.	max 0.35	0.10~ 0.35	0.60~ 1.05	max 0.040	max 0.035	max 0.40	max 0.40	max 0.12	max 0.08	max 0.40	σ s (Mpa) min250	σ b (Mpa) min485	δ (%) min22	Ψ(%) min30	HBW max187
Retainer	13701	0.21	0.24	0.93	0.001	0.017	0.03	0.01	0.00	0.00	0.03	330	530	37	58	150/148

Heat Treatment

Anneal:

Normalizing: 900℃

Quenching:

Tempering:

Solid Solution:

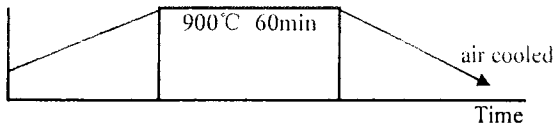

All material listed are in compliance with ISO 15156-09 & NACE MR0103-10. Product in compliance with API 6D-08, API 607-05 CSA Z245.15-09 SOUR

We hereby certify that materials described above are true & correct to the best of our knowledge & comply with the material specification of the purchase order.

Witness / reviewed by customer rep.

Q.A Summer

FORTUNE INDUSTRIES (DALIAN), INC.

9# Longan Road, Ganjingzi District, Dalian, China

MATERIAL TEST REPORT TO EN 10204 3.1

Customer:	FUSION	PO#	17000420	Model #	311FR030R01N1HR	Ref #	FIQ20131219	
Description:	BV 3" RP Class 150 RF			QTY:	180	Date:	2013-12-19	Page: 4/4

Material		Chemical Composition(%)								Mechanical Properties			
ASTM A 479-12 Grade 316		C	Mn	Si	P	S	Cr	Ni	Mo	Yield Strength (Mpa)	Tensile Strength (Mpa)	Elongation / Reduction (%)	Hardness
Part Name	Heat NO.	0.08max	2.00max	1.00max	0.045max	0.030max	16.0-18.0	10.0-14.0	2.00-3.00	205min	515min	30min / 40min	237HBWmax
Stem	05810Y1	0.03	1.09	0.56	0.015	0.005	16.63	10.09	2.05	206	520	40/60	172

Material		Chemical Composition(%)								Mechanical Properties			
ASTM A 351-12b Grade CF8M		C	Mn	Si	P	S	Cr	Ni	Mo	Yield Strength (Mpa)	Tensile Strength (Mpa)	Elongation (%)	Hardness
Part Name	Heat NO.	0.08max	1.50max	1.50max	0.040max	0.040max	18.0-21.0	9.0-12.0	2.00-3.00	205min	485min	30min	237HBWmax
Ball	R1001D1006	0.07	0.84	0.98	0.022	0.031	19.54	10.11	2.56	263	492	37	151

All material listed are in compliance with ISO 15156-09, NACE MR0103-10. Product in compliance with API 6D-08, API 607-05 CSA Z245.15-09 SOUR

We hereby certify that materials described above are true & correct to the best of our knowledge & comply with the material specification of the purchase order.

Witness / reviewed by customer rep.

Q.A Summer

1131926

3" SCH40 SA 106B Pipe
HT# 1327104
PO-14-561-01-13

HENGYANG VALIN STEEL TUBE CO.,LTD

MILL TEST CERTIFICATE

(ACCORDING TO EN10204 3.1B)

Add: 18 Datianwan, Hengyang City,Hunan,P R China P.C 421001
Tel and Fax: +86 734 8873759
E-mail: hsicc@hysteeltube.com

CUSTOMER	SHD TUBULAR LIMITED		CERTIFICATE NO	C2013453de-1	
CONTRACT-ITEM NO	2111000984-05	P.O NO	1.2411	DATE 2013-12-26	PAGE 1/3
PRODUCT	SEAMLESS STEEL LINE PIPE		DELIVERY CONDITION	HR	
SPECIFICATION	SEE SPECIFICATION NOTE	HEAT TREATMENT			
GRADE	B,X42,Grade 290	DIMENSIONS	3" x SCH40 x 200		
TOTAL BUNDLES	TOTAL PIECES	TOTAL LENGTH: ft		TOTAL WEIGHT: mt	

NO.	LOT No.	HEAT No.	BUNDLES	PIECES	LENGTH ft	WEIGHT mt / WT	TENSILE TEST ASTM A370 SAMPLE TYPE/ORIENTATION/SIZE(mm)/GAUGE LENGTH(mm)/SC-1950 TS(Psi)	YS(Psi)	R0.5	El(%)	R.A (%)	YS/TS
1	93Y17 207	1327104			-		71185	49300		34.5		0.69
2	93Y43 208	1327105					70335	50170		34.0		0.71
3	93Y40 209	1325907					71050	49850		34.5		0.70
4	93Y40 810	1325903					68295	46400		34.0		0.68

NO	IMPACT TEST NOTCH TYPE/ORIENTATION/TEMPERATURE/CVSIZE(mm)								NON METALIC INCLUSION	GRAIN SIZE	HARDNESS TEST NACE MR0175/ISO 15156/NACE MR0103 HV10
	AK1 (J)	Av(J)	% SHEAR AREA	LE	AK2 (J)	Av(J)	% SHEAR AREA	LE			
1	/				/						165
2	/				/						165
3	/				/						166
4	/				/						

NOTES
W1--THEORETICAL WEIGHT
W2--ACTUAL WEIGHT
NR--NORMALIZING ROLLED
AK1--ABSORB ENERGY FOR THE FIRST SET

SAMPLE ORIENTATION L--LONGITUDINAL T--TRANSVERSE
SAMPLE TYPE S--STRIP C--CLUBBED F--FULL-SECTION
Q&T--QUENCHING AND TEMPERING
AK2--ABSORB ENERGY FOR THE SECOND SET

N--NORMALIZING
A--ANNEALING
Av--AVERAGE
LE--SIDE EXPANSION

HE--HOT EXPANDED
HR--HOT ROLLED
N&T--NORMALIZING AND TEMPERING

正 本
ORIGINAL

This Material Conforms to
ASME Section II Edition 2013
Initialed By:
Date: Jan 19/2015

HENGYANG VALIN
STEEL TUBE CO.,LTD

MILL TEST CERTIFICATE

Add. 10 Dalecun, Hengyang City, Hunan, P.R.China P.C. 421001
Tel. and Fax: +86 734 8823729
E-mail: hsvc@hysteeltube.com

(ACCORDING TO EN10204 3.1)

CUSTOMER	BED TUBULAR LIMITED	CERTIFICATE NO	C2015045346-1
CONTRACT/ITEM NO	2111000954-06 / P O NO 112411	DATE	2015-12-26 PAGE 2/3
PRODUCT	SEAMLESS STEEL LINE PIPE	DELIVERY CONDITION	HR
SPECIFICATION	SEE SPECIFICATION NOTE	HEAT TREATMENT	
GRADE	B [illegible] Grade 2x0	DIMENSIONS	3" x SCH40 x X52
TOTAL BUNDLES	TOTAL PIECES	TOTAL LENGTH	TOTAL WEIGHT

NO.	HEAT No. / LOT No.	Type	CHEMICAL COMPOSITION (%) C	Si	Mn	Cr	Mo	W	Cu	Ni	P	Al	Sn	As	Pb	Sb	Nb	Ti	Zr	N	B	S	V	Ti	Ca	CE	SUM1	SUM2	SUM3	R1	R2	R3
			*100										*1000												1000			*100		*1000			
		P		✓	✓	✓	✓		✓	✓	✓												✓	✓									
1	93Y10[illegible]	H	16	32	125	36	11		62	25	12		1					1					17	8	2	35	4.8	26	138			
	93Y10[illegible]207	S	14	29	120	31	11		61	23	12							1					18	23	1	36	31.5	33	43			
	93Y40[illegible]207	P	14	29	120	34	11		61	25	12							1					40	20	1	36	153	3	14			
	[illegible]37135	H	13	30	126	36	9		60	22	13							1					16	7	1	35	28.7	2.7	9.4			
2	93Y10[illegible]208	P	14	29	120	36	10		61	25	12							1					17	22	1	36	32.3	3.2	9.21			
	93Y40[illegible]208	S	13	29	120	36	10		61	25	12							1					37	18	1	35	30.8	2.6	8.8			
	[illegible]525937	H	12	30	127	37			45	23	10							1	10				35	46	2	20	136	5	21			
3	93Y40[illegible]209	P	13	29	122	35	10		62	25								1	10				34	33	1	35	33.2	3.3	9.21			
	93Y40[illegible]209	S	13	29	120	34	10		61	23	12							1	11				38	32	1	35	30.7	3.2	8.21			
	[illegible]525937	P	12	30	124	1	23		46	26	14							1	11				38	48	2	20	139	5	21			
	93Y40[illegible]8.0	P	13	32	123	37	23		48	25	10							1	13				31	35	1	36	153.3	4.3	17.31			
	93Y40[illegible]8.0	S	13	32	123	37	22		48	25	10							1	13				37	34	1	36	152.4	4.3	17.41			
		H																														
		P																														

NON-DESTRUCTIVE TEST

POSITION	PIPE BODY	PIPE END	END SURFACE(GROOVE)
NDT Type(Level)	ET/L4		
LAMINAR			
TEST RESULT	ACCEPTABLE	N/A	N/A
RESIDUAL MAGNETISM		ACCEPTABLE	
UT THICKNESS MEASUREMENT		SEA	
HYDROSTATIC TEST	Mpa/psi 5000/6	ACCEPTABLE	

BEVELLING: ACCEPTABLE
VISUAL & DIMENSION: ACCEPTABLE
COATING: ACCEPTABLE

NOTES: H-HEAT ANALYSIS P-PRODUCT ANALYSIS CE-EQUIVALENT CARBON R-RATIO RT-CAST IS REMAIN R-Mn/Ni

CEIIW=C+Mn/6+(Cr+Mo+V)/5+(Cu+Ni)/15 CEPCM=C+Si/30+(Mn+Cu+Cr)/20+Ni/60+Mo/15+V/10+5B SUM1=Cr+Cu+Mo+Ni+V SUM2=Mo+V SUM3=Nb+V+Ti

ET-ASTM E309 UT-ASTM E213 EMI-ASTM E570 MPI-ASTM E709

L4/L3/L2=ACCEPT LEVEL L4/L3/L2,NOTCH DEPTH IS 12.5%/10%/5% THE SPECIFIED WALL THICKNESS

正 本
ORIGINAL

HENGYANG VALIN
STEEL TUBE CO.,LTD

MILL TEST CERTIFICATE

(ACCORDING TO EN10204 3.1B)

Add: 10 Dalianxiou, Hengyang
City,Hunan,P.R China P.C 421001
Tel and Fax: +86 734 8873739
E-mail: hsiec@hysteeltube.com

CUSTOMER	BHD TUBULAR LIMITED			CERTIFICATE NO	C201345346-1		
CONTRACT ITEM NO	2111000984-06	P.O.NO	112411	DATE	2013-12-26	PAGE	3/3
PRODUCT	SEAMLESS STEEL LINE PIPE			DELIVERY CONDITION	HR		
SPECIFICATION	SEE SPECIFICATION NOTE	HEAT TREATMENT					
GRADE	B.B.N-2,Grade 290			DIMENSIONS	3" x SCH10 x 200		
TOTAL BUNDLES:		TOTAL PIECES:		TOTAL LENGTH	0	TOTAL WEIGHT	0

REMARK : ORIGIN MADE IN CHINA

SPECIFICATION NOTE	API 5L(45th)PSL1, ASTM/ASME A/SA106, CSA Z245.1 CAT 1, NACE MR0175(ONLY FOR HARDNESS)	

We hereby certify that material herein described has been manufactured in accordance with the standards and specifications required in your order and satisfies the corresponding requirements

This certificate is issued by a computerized system and it is valid with electronic signature. In case the owner of the certificate would release a copy of it he must attest its conformity to the original one taking upon himself the responsibility for any unlawful or not allowed use.

Any alteration and/or falsification will be subject to the law

If you need to assure the authenticity of this certificate ,please do not hesitate to contact Hengyang Valin Steel Tube CO.,LTD, E-mail: hsiec@hysteeltube.com

CUSTOMER THIRD PARTY

Quality Manager

Certificate-maker 唐娅娜

正 本
ORIGINAL

HT # 3517
1" 6M union SA105 N
PO-14-561-01-20

BOTH-WELL STEEL FITTINGS CO., LTD.

NO.303, REN-SIN ROAD, REN-WU DISTRICT, KAOHSIUNG CITY TAIWAN R.O.C.(81460)
TEL : (886)7-3711536, 3710497, 3720260 FAX : (886)7-3713864, 3713886
WEB SITE : http://www.bothwell.com.tw E-Mail : box@bothwell.com.tw

An ISO 9001:2008 Registered Manufacturer

MILL TEST & INSPECTION CERTIFICATE

ACCORDING TO EN 10204 3.1

CUSTOMER : WFF FITTINGS AND FLANGES (CANADA)LTD. PAGE : 1
CERT NO : 143179 INVOICE NO : 5200002744 DATE : 10/10/2014
ORDER NO : E000495 L/C NO : ORIGIN : TAIWAN

ITEM	RAW HEAT NO. HEAT CODE	QTY	DESC/GRADE OR SPECIFICATION NO. CHEMICAL COMPOSITION(%) MECHANICAL PROPERTIES. SUPPLIER.
7	320875 3517	100 PCS	UNION/NUT(HEX)-BODY(ROD) A105 1/2" 6000# NPT C:0.200 SI:0.170 MN:0.840 P:0.019 S:0.013 CU:0.140 CR:0.090 NI:0.060 MO:0.010 V:0.002 NB:0.001 N:- CE:0.374 TS(KSI):75.6 YS 0.2%(KSI):50.8 EL(%):35.0 R.A.(%):67.3 HARDNESS1(HBW):143 HARDNESS2(HBW):143
8	0097741 4352	200 PCS	UNION/NUT(OCT)-BODY(OCT) A105 1" 3000# NPT C:0.18 SI:0.19 MN:0.93 P:0.015 S:0.006 CU:0.16 CR:0.07 NI:0.06 MO:0.01 V:0.001 NB:0.000 CE:0.37 TS(KSI):77.4 YS 0.2%(KSI):54.4 EL(%):35.4 R.A.(%):68.2 HARDNESS1(HBW):143 HARDNESS2(HBW):145
94	342380 4377	100 PCS	UNION/NUT(OCT)-BODY(OCT) A105 1/2" 3000# NPT C:0.19 SI:0.21 MN:0.84 P:0.020 S:0.009 CU:0.17 CR:0.12 NI:0.06 MO:0.01 V:0.004 NB:0.002 CE:0.37 TS(KSI):79.0 YS 0.2%(KSI):45.0 EL(%):32.0 R.A.(%):67.0 HARDNESS1(HBW):145 HARDNESS2(HBW):146
106	342375 4361	48 PCS	UNION/NUT(OCT)-BODY(ROD) A105 2" 3000# S/W C:0.19 SI:0.20 MN:0.84 P:0.014 S:0.011 CU:0.19 CR:0.09 NI:0.07 MO:0.02 V:0.003 NB:0.002 CE:0.37 TS(KSI):76.2 YS 0.2%(KSI):53.2 EL(%):35.8 R.A.(%):68.2 HARDNESS1(HBW):143 HARDNESS2(HBW):145

WE CERTIFY THE ABOVE MENTIONED FITTINGS HAVE BEEN MANUFACTURED, SAMPLED, TESTED, AND INSPECTED IN ACCORDANCE WITH THE SPECIFICATIONS SHOWN

C.C. Huang
Q.C. MANAGER

C.L. Ko
INSPECTOR

This Material Conforms to ASME Section II Edition 2013
Initialed By:
Date: Feb 03/2015

BW-D0839 REV:3

BOTH-WELL STEEL FITTINGS CO., LTD.

NO.303, REN-SIN ROAD, REN-WU DISTRICT, KAOHSIUNG CITY TAIWAN R.O.C.(81460)
TEL : (886)7-3711536, 3710497, 3720260 FAX : (886)7-3713864, 3713886
WEB SITE : http://www.bothwell.com.tw E-Mail : box@bothwell.com.tw

An ISO 9001:2008 Registered Manufacturer

MILL TEST & INSPECTION CERTIFICATE

ACCORDING TO EN 10204 3.1

CUSTOMER : WFF FITTINGS AND FLANGES (CANADA)LTD. PAGE : 2
CERT NO : 143179 INVOICE NO : 5200002744 DATE : 10/10/2014
ORDER NO : E000495 L/C NO : ORIGIN : TAIWAN

ITEM	RAW HEAT NO. HEAT CODE	QTY	DESC/GRADE OR SPECIFICATION NO. CHEMICAL COMPOSITION(%) MECHANICAL PROPERTIES. SUPPLIER.
107	341589 4311	240 PCS	UNION/NUT(OCT)-BODY(OCT) A105 3/4" 3000# NPT C:0.19 SI:0.19 MN:0.83 P:0.020 S:0.015 CU:0.18 CR:0.07 NI:0.05 MO:0.01 V:0.002 NB:0.002 CE:0.36 TS(KSI):75.6 YS 0.2%(KSI):49.9 EL(%):36.4 R.A.(%):66.4 HARDNESS1(HBW):143 HARDNESS2(HBW):146

REMARK :
THE MATERIAL SUPPLIED IDENTIFIED AS ASTM A105N -13, ASME SA105N-2013ED
THE FITTING SUPPLIED IDENTIFIED AS MSS SP-83 - 2006
THE PRODUCT SUPPLIED WAS INSPECTED IN ACCORDANCE WITH SPECIFICATION(SURFACE & DIM). : GOOD
FULLY KILLED AND FINE GRAIN PRACTICE

	C	Si	Mn	P	S	Cu	Cr	Ni	Mo	V	Cb(Nb)
MIN	-	0.10	0.60	-	-	-	-	-	-	-	-
MAX	0.35	0.35	1.05	0.035	0.040	0.40	0.30	0.40	0.12	0.08	-
	N	Al	Ti	Zr	CE	TS(KSI)	YS	YS 0.2%(KSI)	EL(%)	R of A(%)	HARDNESS(H
MIN	-				-	70		36	22	30	-
MAX	-				0.43	-		-	-	-	187

HEAT TREATMENT : NORMALIZED: 900°C(1652°F) A.C.
STEEL MAKING PROCESS : ELECTRIC FURNACE
CONFORMS TO NACE MR0175-09/ISO15156-09/MR0103-12

WE CERTIFY THE ABOVE MENTIONED FITTINGS HAVE BEEN MANUFACTURED, SAMPLED, TESTED, AND INSPECTED IN ACCORDANCE WITH THE SPECIFICATIONS SHOWN

C. C. Huang — Q.C. MANAGER

C. L. Ko — INSPECTOR

1" 6M Tee SA 105N
HT # UHDL

FORM PMC Rev. 0 15-05-2009

M.E.G.A.

CERTIFICATO DI COLLAUDO
TEST CERTIFICATE
CERTIFICAT DE CONTROLE

COMPANY WITH QUALITY SYSTEM CERTIFIED BY DNV ISO 9001

CLIENTE / Customer / Client: W.F.F. FITTINGS & FLANGES (CANADA) LTD. #128,10905 - 48TH STREET SE CALGARY, ALBERTA T2C 1G8

ORDINE / Purchase order / Commande: C000127

CERTIFICATO N. / Certificate N. / Certificat N.: 590233 FOGLIO / Sheet / Feuille: 1

DATA / Date: 29/11/12

COMMESSA / Job N. / Confirmation de commande: 96157

PROVA Test Epreuve	MATERIALE Material / Matière	COLATA Heat / Coulée	C %	Si %	Mn %	S %	P %	Cr %	Ni %	Mo %	Ti %	Cu %	V %	Al %	CE %
UHDL	ASTM A105N/11	09/79535	0.200	0.230	0.850	0.010	0.010	00.10	00.06	0.020	0.020	0.180	0.020	0.025	0.385
			--->	Nb%=	0.001	B %=	0.000	Sn%=	0.009						CEs=0.3417
KXCN	ASTM A105/05	08/73470	0.210	0.210	0.720	0.009	0.013	00.09	00.06	0.010	0.000	0.180	0.011	0.000	0.368
		Cod.AA	--->	Nb%=	0.001					B %=	0.000				CEs= 0.330
KXCR	ASTM A105/05	08/73472	0.200	0.220	0.800	0.009	0.020	00.12	00.07	0.020	0.000	0.200	0.012	0.000	0.381
		Cod.AA	--->	Nb%=	0.001	B %=	0.000								CEs= 0.333
PCXC	ASTM A105/05	835677	0.180	0.215	1.170	0.009	0.015	00.10	00.02	0.004	0.000	0.031	0.003	0.000	0.401
			--->	Nb%=	0.002										CEs= 0.375
UKSD	ASTM A105/10	70575	0.190	0.210	0.850	0.007	0.012	00.16	00.07	0.030	0.000	0.150	0.013	0.000	0.386
			--->	Nb%=	0.002	B %=	0.000								CEs=0.3317
UKSF	ASTM A105/10	1T-52332	0.190	0.210	0.810	0.006	0.010	00.08	00.12	0.030	0.000	0.260	0.001	0.000	0.372
			--->	Nb%=	0.002	B %=	0.000								CEs= 0.325

PROVA Test Epreuve	PROVETTA Test speciman / Epreouvette *	SEZIONE Section / Sect.	LUNGHEZZA Length / Longeur	SNERVAMENTO MPa≥ Yield strength Limite d'elasticité	ROTTURA MPa≥ Tensile strength Rupture	ALLUNGAMENTO % ≥ Elongation Allongement	CONTRAZIONE % ≥ Reduction of area Striction	DUREZZA HB Hardness Dureté	PIEGA Bend test Pliage	SCHIACC. Flatt. test Aplatiss.	RESILIENZA Impact test / Résilience UNITÀ MIS. UM	TIPO Type	T. °C Test temp	VALORE / Value / Données
UHDL	1	59.2	35.0	316.7	517.7	37.0	56.9	145-147			J	KV	0	49-51-48
KXCN	1	30.6	25.0	342.4	499.0	28.0	54.0	146-150			J	KV	0	46-52-54
KXCR	1	30.5	25.0	355.0	506.0	29.0	54.0	150-155			J	KV	0	50-56-60
PCXC	1	30.5	25.0	365.5	512.1	30.1	53.6	150-155			J	KV	0	48-50-50
UKSD	1	30.6	25.0	302.5	512.2	30.1	56.2	145-151			J	KV	0	66-76-78
UKSF	1	30.6	50.0	299.1	502.9	30.1	55.2	148-152			J	KV	0	62-66-66

PROVA Test Epreuve	NOTE / Remarks / Notes	FORMA Shape / Forme : 1 = ø 2 = □
	EN10204-2005/3.1	
UHDL	ELECT.FURNACE-NORMALIZED AT 900 C COOLED IN STILL AIR.	/CERT.12067.MEGA/I*585105MEGA
KXCN	ELECT.FURNACE-NORMALIZED AT 910 C COOLED IN STILL AIR.	/CERT.0040341.FEAT*553825MEGA*StampedCode:AA*
KXCR	ELECT.FURNACE-NORMALIZED AT 910 C COOLED IN STILL AIR.	/CERT.0040340.FEAT*553825MEGA*StampedCode:AA*
PCXC	ELECT.FURNACE-NORMALIZED AT 910 C COOLED IN STILL AIR.	/CERT.2009/0040126.FEAT*565603MEGA*
UKSD	ELECT.FURNACE-NORMALIZED AT 900 C COOLED IN STILL AIR.	/40330.03 FEAT*
UKSF	ELECT.FURNACE-NORMALIZED AT 910 C COOLED IN STILL AIR.	/CERT.2011/0040348.FEAT*583005MEGA*

PROVA Test Epreuve	POS. Item Pos.	QUANTITÀ Quantity Quantité	CODICE CLIENTE Customer code Code client	DESCRIZIONE / Description / Description		VISUAL AND DIMENSIONAL
UHDL	008	150	C000127	TEE S. 6000 NPT A/SA105N 1		OK
KXCN	036	112	C000127	UNION S. 3000 NPT A/SA105N 2	female	OK
KXCR	036	54	C000127	UNION S. 3000 NPT A/SA105N 2	male	OK
PCXC	036	68	C000127	UNION S. 3000 NPT A/SA105N 2	female	OK
UKSD	036	180	C000127	UNION S. 3000 NPT A/SA105N 2	nut	OK
UKSF	036	126	C000127	UNION S. 3000 NPT A/SA105N 2	male	OK

This Material Conforms to
ASME Section II Edition 2013
Initialed By: ☺
Date: feb03/2015

NOTE / Remarks / Notes	ENTE UFFICIALE DI COLLAUDO Inspection Authority Service Inspection Officiel	CAPO COLLAUDO Chief Inspection DPT Responsable assurance qualité
MATERIAL ACCORDING TO NACE MR0175 / ISO 15156-1-2-3 Ed.2009		DOC. CERT. M.E.G.A. Emmanuel Centemeri

2128 - 10360 - 45 STREET SE
CALGARY, ALBERTA T2C 1H8

CERTIFICATO DI CONTROLLO
TEST CERTIFICATE
CERTIFICAT DE CONTROLE

COMPANY WITH QUALITY SYSTEM CERTIFIED BY DNV

ORDINE Purchase order Commande: C000127

Job N. 36157

PROVA Test Epreuve	TENSILE Material / Matière	COLATA Cast / Coulée	C %	Si %	Mn %	P %	S %	Cr %	Ni %	Mo %	Al %	Cu %	V %	Nb %	Ti %

PROVA Test Epreuve	PROVETTA Test specimen / Eprouvette		SNERVAMENTO MPa ≥ Yield strength Limite d'elasticité	ROTTURA MPa ≥ Tensile strength Rupture	ALLUNGAMENTO % ≥ Elongation Allongement	CONTRAZIONE % ≥ Reduction of area Striction	DUREZZA HB Hardness Dureté	PIEGA Bend test Pliage	SCHIACC. Flatt. test Aplatiss.	RESILIENZA Impact test / Résilience			
	SEZIONE Section / Sect.	LUNGHEZZA Length / Longeur								UNITÀ MIS. UM	TIPO Type	T. °C Test temp	VALORE / Value / Données

THIS CERTIFICATE INCLUDES N. 3 SHEETS.

PROVA Test Epreuve	POS. Item Pos.	QUANTITÀ Quantity Quantité	CODICE CLIENTE Customer code Code client	DESCRIZIONE / Description / Désignation
				Dimensional check on 45 and 90 deg elbows Reducer Sockets full and half couplings SWEDS square hexagonal and round plugs hexagonal and flush bushings according to ASME B.16.11 (Threads according to ANSI/ASME B1.20.1) Outlets:ASME B.31.1 & B.31.3 & MSS-SP-97 Seamless swage nipples:BS3799-74 or MSS SP95-86 Flanged olets according to: ASME B.31.1 & B.31.3 & B.16.5 Unions: BS 3799 or MSS-SP-83 Seamless pipe nipples : 836.10-95 or 36.19-85 Material according to : ASTM last Edition (2011 Books) ASME II 2010 ED. Add.2011 The chemical and mechanical values shown on this are correct copy of mill test certificate issued by the steel mill, or by the laboratory which has determined it [illegible] approved with [illegible] by [illegible]
				[illegible]
				[illegible] Chemical analysis spectrometer BAIRD DV4 serial P017 (ASTM E415 and E1086). Marking according to MSS SP25 Tensile specimens with gage length equal to 4D has been used FLANGED THIPOLET When not specified in description length = 150mm

NOTE / Commenti / Notes	ENTE UFFICIALE DI ISPEZIONE Inspection Authority Service Inspection Officiel	ISPETTORE DI COLLAUDO Client Inspection DPT Contrôle assurance qualité
MATERIAL ACCORDING TO MALE MF0175 / ISO 15156-1-2-3 Ed.2009		DOC CERT. M.E.G.A. Emanuel Clements

1" 6M CROSS SA 105 N
HT# CDDU
PO-14-561-01-20

FORM PMC Rev. 0 15-05-2009

M.E.G.A.

CERTIFICATO DI COLLAUDO
TEST CERTIFICATE
CERTIFICAT DE CONTROLE

COMPANY WITH QUALITY SYSTEM CERTIFIED BY DNV ISO 9001

CLIENTE / Customer / Client: W.F.F. FITTINGS & FLANGES (CANADA) LTD.
#128,10905 - 48TH STREET SE
CALGARY, ALBERTA T2C 1GB

ORDINE / Purchase order / Commande: D000410

CERTIFICATO N. / Certificate N. / Certificat N.: 587923 FOGLIO / Sheet / Feuille: 8

DATA / Date: 27/07/12

COMMESSA / Job N. / Confirmation de commande: 97568

PROVA Test Epreuve	MATERIALE Material / Matière	COLATA Heat / Coulée	C %	Si %	Mn %	S %	P %	Cr %	Ni %	Mo %	Ti %	Cu %	V %	Al %	CE %
KTCA	ASTM A105/05	08/73914	0.200	0.230	0.910	0.006	0.011	00.07	00.05	0.010	0.018	0.100	0.019	0.024	0.381
			--->	Nb%=	0.001			Sn%=	0.007					CEs=	0.351
CDDU	ASTM A105/01	77307	0.185	0.190	0.990	0.026	0.011	00.05	00.05	0.010	0.010	0.190	0.002	0.005	0.378
			--->			Nb%=	0.001							CEs=	0.350
NCNB	ASTM A105/03	05/75781	0.185	0.170	0.910	0.010	0.014	00.11	00.06	0.020	0.019	0.170	0.024	0.023	0.382
			--->	Nb%=	0.000	B %=	0.000							CEs=	0.3367
DNDB	ASTM A105/01	AUD*30693	0.190	0.250	0.970	0.024	0.012	00.13	00.07	0.010	0.010	0.210	0.004	0.005	0.399
			--->			Nb%=	0.003			B %=	0.000			CEs=	0.3517
UDNB	ASTM A105/09	10/72870	0.185	0.210	0.960	0.009	0.009	00.07	00.05	0.010	0.017	0.160	0.018	0.023	0.378
			--->	Nb%=	0.002			Sn%=	0.008			B %=	0.000	CEs=	0.345
BTAS	ASTM A105N/98	LL*28205	0.200	0.190	0.990	0.024	0.026	00.10	00.09	0.017	0.000	0.330	0.000	0.000	0.416
			--->			Nb%=	0.001							CEs=	0.365

PROVA Test Epreuve	PROVETTA Test specimen / Epreuvette *	SEZIONE Section / Sect.	LUNGHEZZA Length / Longeur	SNERVAMENTO MPa≥ Yield strength Limite d'elasticité	ROTTURA MPa≥ Tensile strength Rupture	ALLUNGAMENTO % ≥ Elongation Allongement	CONTRAZIONE % ≥ Reduction of area Striction	DUREZZA HB Hardness Dureté	PIEGA Bend test Pliage	SCHIACC. Flatt. test Aplatiss.	RESILIENZA Impact test / Résilience UNITÀ MIS. UM	TIPO Type	T. °C Test temp	VALORE / Value / Données
KTCA	1	60.1	35.0	301.0	527.0	31.5	68.0	146-152			J	KV	0	46-56-48
CDDU	1	126.6	50.0	318.0	514.0	33.0	58.0	158-162			J	KV	0	60-64-66
NCNB	1	30.6	25.0	303.0	517.0	31.6	68.3	143-149			J	KV	0	46-40-40
DNDB	1	126.6	50.0	323.0	515.0	31.0	63.0	156-159						
UDNB	1	30.6	25.0	301.0	522.0	32.3	69.5	143-149			J	KV	0	34-46-48
BTAS	1	126.6	50.0	317.0	524.0	31.0	63.0	159-163						

PROVA Test Epreuve — NOTE / Remarks / Notes: EN10204-2005/3.1

* FORMA Shape / Forma : 1 = ø 2 = □

KTCA	ELECT.FURNACE-NORMALIZED AT 900 C COOLED IN STILL AIR. /CERT.260.EVASI*551906 MEGA*
CDDU	ELECT.FURNACE-NORMALIZED AT 900 C COOLED IN STILL AIR. /CERT.43929,00 RIVA*1390,02 METALFAR
NCNB	ELECT.FURNACE-NORMALIZED AT 920 C COOLED IN STILL AIR. /CERT.25.06 EVASI*530498 MEGA*
DNDB	ELECT.FURNACE-NORMALIZED AT 900 C COOLED IN STILL AIR. /CERT.3271.03 METALFAR
UDNB	ELECT.FURNACE-NORMALIZED AT 900 C COOLED IN STILL AIR. /CERT.366.EVASI*575544MEGA
BTAS	ELECT.FURNACE-NORMALIZED AT 900 C COOLED IN STILL AIR. /CERT.9573,00 FERROSIDER*3427,01 METALFAR

PROVA Test Epreuve	POS. Item Pos.	QUANTITÀ Quantity Quantité	CODICE CLIENTE Customer code Code client	DESCRIZIONE / Description / Description	VISUAL AND DIMENSIONAL
KTCA	043	2	D000410	CROSS S. 6000 NPT A/SA105N 1/2	OK
CDDU	044	2	D000410	CROSS S. 6000 NPT A/SA105N 1	OK
NCNB	045	20	D000410	STREET ELBOW S. 3000 NPT A/SA105N 1	OK
DNDB	046	6	D000410	STREET ELBOW S. 3000 NPT A/SA105N 2	OK
UDNB	047	2	D000410	STREET ELBOW S. 6000 NPT A/SA105N 1/2	OK
BTAS	048	2	D000410	STREET ELBOW S. 6000 NPT A/SA105N 1	OK

This Material Conforms to
ASME Section II Edition 2013
Initialed By: G
Date: Feb 03/2015

NOTE / Remarks / Notes	ENTE UFFICIALE DI COLLAUDO Inspection Authority Service Inspection Officiel	CAPO COLLAUDO Chief Inspection DPT Responsable assurance qualité
MATERIAL ACCORDING TO NACE MR0175 / ISO 15156-1-2-3 Ed.2009		DOC. CERT. M.E.G.A. Emmanuel Centemeri

CERTIFICATO DI COLLAUDO
TEST CERTIFICATE
CERTIFICAT DE CONTROLE

CERTIFIED BY DNV

Ordine
Purchase order 0000410
Commande

Job N. 97563
Confirmation de commande

PROVA Test Epreuve	DISEGNO / CODICE Drawing / Code	CODICE Piece Code	Q.tà	Sigla	Tipo	Rif.	Rif.	Rif.	Rif.	Rif.	Rif.	Rif.	Rif.	Rif.	Rif.

PROVA Test Epreuve	PROVETTA Test specimen / Eprouvette		SNERVAMENTO MPa≥	ROTTURA MPa≥	ALLUNGAMENTO % ≥	CONTRAZIONE % ≥	DUREZZA HB	PIEGA	SCHIACC	RESILIENZA Impact test / Résilience			
	SEZIONE Section / Sect	LUNGHEZZA Length / Longeur	Yield strength Limite d'elasticité	Tensile strength Rupture	Elongation Allongement	Reduction of area Striction	Hardness Dureté	Bend test Pliage	Flatt. test Aplatiss.	UNITÀ MIS. UM	TIPO Type	T. °C Test temp	VALORE / Value / Données

PROVA Test Epreuve: [illegible]

THIS CERTIFICATE INCLUDES N° 13 SHEETS

PROVA Test Epreuve	Pos Item Pos	QUANTITÀ Quantity Quantité	CODICE CLIENTE Customer code Code client	DESCRIZIONE / Description / Description
				Dimensional check for 45 and 90 deg threaded pipes full and half couplings caps square hexagonal and round plugs hexagonal and flush bushings according to ASME B.16.11 (Threads according to ANSI/ASME B1.20.1) Outlets:ASME B.31.1 & B.31.3 & MSS-SP-97 Seamless swage nipples:BS3799-74 or MSS SP95-86 Unions: BS 3799 or MSS-SP-83 Seamless pipe nipples : B36.10-95 or 36.19-85 Material according to : ASTM last Edition (2010 Books) ASME II 2010 ED. The chemical and mechanical values shown on this record are the values reported on mill certificate or those obtained by laboratory. Material: A182 F304L is according to A182 F304 / A182 F316L is according to A182 F316. Alloy verification on base material [illegible]
				equipments used: Tensile test Galdabini Quasar 25 serial 04031 / Impact test Controls U500 serial 04031 / Hardness test Wolpert Dia Testor 2RC ser.8900293/0001 / Chemical analisys Spectrometer BAIRD DV4 ser.P017

NOTE / Remarks / Notes	ENTE ISPETTIVO DI COLLAUDO Inspection Authority Service Inspection Officiel	CONTROLLO Quality Inspection QAT Responsable assurance qualité
MATERIAL ACCORDING TO PED 97/23 / ISO 15156-1-2-3 Ed 2009		DOC. CERT. M.E.G. s.r.l. Emmanuel Centemeri

HT # 200 A5
1"x 1/2" 6m Bushing SA105N
PO - 14-56 1-01-20

CLIENTE / Customer / Client

WELDING FITTINGS & FLANGES LTD
7004K-5TH STREET S.E.
CALGARY - ALBERTA T2H 2G3
CANADA

CERTIFICADO DE INSPECCION

Works Certificate - Certificat d'Usine

DIN EN 10204 / 3.1
ISO 10474 / 3.1

FECHA / Date: 12/06/2007 N.º / No. 114719 HOJA / Page: 3

N.º: SGI 1922164

ULMA FORJA, S.COOP.
Bº Zubillaga, 3 - Apdo. 14
20560 OÑATI (Gipuzkoa) SPAIN
Tel.: 34 - 943 780552
Fax: 34 - 943 781808
E-mail: ulma@ulmapiping.com

PRODUCTO / Article - Produit: FITTING

SU PEDIDO N.º / Your Order No. / Votre Cde. N.º: E04857KD/MF

DE / of. - de: 03/02/2007

Certified acc. PED 97/23/EC by TÜV Rheinland N.º 01 202 E/Q 02 7443

NORMAS APLICABLES / Requirements - Normes Applicables: ASME B16.11-01

MATERIAL CORRESPONDIENTE / Material Correspondent - Qualité: ASTMA105N-05 / ASME SA105N-05

MODO DE FUSION (*) / Steel Making - Elaboration de l'acier: NACE MR-01-75/03

E = Elec. Y = Oxigeno básico

MARCA DEL FABRICANTE / Mark of factory / Marque du fabricant: 60236

DEPARTAMENTO / Section / Department: QUALITY ASSURANCE

PARTIDA / Item / Poste	CANTIDAD / Quantity / Quantité	DESCRIPCION / Description / Description	OBSERVACIONES / Remarks / Observations (*)	COLADA N.º / Heat No / N.ºCoulée	RESISTENCIA / T.Strength / Resist.Rupt. N/mm2	LIMITE ELAST. / Y.Strength / Limite Elast. N/mm2	ALARGAM. / Elongation / Allongement Lo: 4 d %	ESTRICCION / Red. Area / Striction %	RESILENCIA / Impact test / Resilience Joules	MEDIA / Average / Moyenne	°C	DUREZA / Hardness / Dureté HB
116 11R023300	960	H.BUSSING 1X1/4 NPT A105N	NE	200A5	511	320	34,70	68,30				150
118 11R025300	2.560	H.BUSSING 1X1/2 NPT A105N	NE	200A5	511	320	34,70	68,30				150
119 11R026300	880	H.BUSSING 1X3/4 NPT A105N	NE	200A5	511	320	34,70	68,30				150
127 11R060300	225	H.BUSSING 3X2 NPT A105N	NE	FC1	510	316	32,80	57,10				150
134 11N004300	1.800	H/H-PLUG 3/4 NPT A105N	NE	332A5	515	312	33,80	67,00				151
139 11N008300	1.236	H/H-PLUG 2 NPT A105N	NE	419A5	512	318	33,20	67,00				150
141 11N010300	20	H/H-PLUG 3 NPT A105N	NE	FC1	510	316	32,80	57,10				150
144 11A001301	105	COUPLING 1/4 6000LB NPT A105N	NE	187AX	510	302	30,60	53,00				150

COMPOSICION QUIMICA - STEEL MARKER'S LADLE ANALYSIS - ANALYSE CHIMIQUE

COLADA N.º / Heat No / N.ºCoulée	C %	Si %	Mn %	P %	S %	Cr %	Ni %	Mo %	Nb %	V %	Cu %	CEQ %
187AX	0.180	0.250	1.200	0.024	0.020	0.120	0.100	0.020	0.000	0.010	0.060	0.421
200A5	0.180	0.220	0.830	0.012	0.013	0.140	0.100	0.030	0.002	0.000	0.220	0.374
332A5	0.180	0.200	0.820	0.010	0.012	0.140	0.090	0.030	0.002	0.020	0.160	0.371
419A5	0.190	0.190	0.840	0.011	0.016	0.080	0.070	0.010	0.002	0.001	0.210	0.367
FC1	0.190	0.200	0.910	0.014	0.004	0.140	0.060	0.010	0.000	0.020	0.180	0.392

- Las dimensiones y la condicion superficial se hallaron satisfactorias
- Dimension and surface condition were found acceptable
- Les dimensions et etats de surface sont satisfaisants

- Los materiales citados cumplen las normas aplicables
- Manufacturing requirements are satisfied
- Les normes applicables sont respectees

EL INSPECTOR
Works Inspector - L'Inspecteur

ULMA Forja, S. Coop.
Dpto. de Garantía de Calidad
Quality Assurance Dept.

(*) OBSERVACIONES / Remarks / Observations: N_NORMALIZED AT 900 C AND ALLOWED TO COOL IN STILL AIR

This Material Conforms to
ASME Section II Edition 2013
Initialed By: ③
Date: feb 03/2015

1" sch 160 SA106B sample
HT# 10240858 4
PO-14-561-01-20

Jinan Meide Casting Co., Ltd.
No. 3 Nanmen Road, Pingyin, Jinan China
Material Test Report

Customer : SEYBOLD
CertNo/OrderNo.: 311-1325891D
P.O. NO: 7007723
Material Specification : ASME SA106/ASTM A106-(2006)

date: 17/Jan/14

Logo:

DESCRIPTION	Lot No.	Mechanical Properties			Chemical Analysis %									
		Y.S.	U.T.S.	Elong	C	Mn	P	S	Si	Cr	Cu	Mo	Ni	V
		min	min	min	Max	0.29-1.06	Max	Max	Min	Max	Max	Max	Max	Max
		240Mpa	415Mpa	26	0.3		0.035	0.035	0.1	0.4	0.4	0.15	0.4	0.08
SCH160. SEAMLESS BLK NIPPLES 11/4XCLOSE	510110508	320	485	47	0.19	0.45	0.017	0.007	0.23	0.04	0.01	0	0.01	0
SCH160. SEAMLESS BLK NIPPLES 1X3	102408584	335	485	49	0.19	0.5	0.017	0.009	0.21	0.03	0.05	0	0.01	0
SCH160. SEAMLESS BLK NIPPLES 1X4	102408584	335	485	49	0.19	0.5	0.017	0.009	0.21	0.03	0.05	0	0.01	0
SCH160. SEAMLESS BLK NIPPLES 1X41/2	102408584	335	485	49	0.19	0.5	0.017	0.009	0.21	0.03	0.05	0	0.01	0
SCH160. SEAMLESS BLK NIPPLES 1X5	102408584	335	485	49	0.19	0.5	0.017	0.009	0.21	0.03	0.05	0	0.01	0
SCH160. SEAMLESS BLK NIPPLES 1X51/2	102408584	335	485	49	0.19	0.5	0.017	0.009	0.21	0.03	0.05	0	0.01	0
SCH160. SEAMLESS BLK NIPPLES 1X6	102408584	335	485	49	0.19	0.5	0.017	0.009	0.21	0.03	0.05	0	0.01	0
SCH160. SEAMLESS BLK NIPPLES 1XCLOSE	102408584	335	485	49	0.19	0.5	0.017	0.009	0.21	0.03	0.05	0	0.01	0
SCH160. SEAMLESS BLK NIPPLES 3X10	Y706-241	335	455	32.5	0.18	0.53	0.015	0.009	0.21	0.03	0.04	0.01	0.01	0.001
SCH160. SEAMLESS BLK NIPPLES 3X4	Y706-241	335	455	32.5	0.18	0.53	0.015	0.009	0.21	0.03	0.04	0.01	0.01	0.001
SCH160. SEAMLESS BLK NIPPLES 4X6	30711-364	345	480	31.5	0.2	0.58	0.014	0.006	0.19	0.03	0.03	0.013	0.01	0.002
SCH160. SEAMLESS BLK NIPPLES 1/2X2	2104373	325	475	45.5	0.2	0.5	0.008	0.009	0.21	0.07	0.09	0	0.03	0
SCH160. SEAMLESS BLK NIPPLES 1/2X4	2104373	325	475	45.5	0.2	0.5	0.008	0.009	0.21	0.07	0.09	0	0.03	0
SCH160. SEAMLESS BLK NIPPLES 1/2XCLOSE	2104373	325	475	45.5	0.2	0.5	0.008	0.009	0.21	0.07	0.09	0	0.03	0
SCH160. SEAMLESS BLK NIPPLES 2X3	11280956	340	485	35	0.2	0.45	0.014	0.011	0.22	0	0.1	0	0.06	0
SCH160. SEAMLESS BLK NIPPLES 2X4	11280956	340	485	35	0.2	0.45	0.014	0.011	0.22	0	0.1	0	0.06	0
SCH160. SEAMLESS BLK NIPPLES 2X5	11280956	340	485	35	0.2	0.45	0.014	0.011	0.22	0	0.1	0	0.06	0
SCH160. SEAMLESS BLK NIPPLES 2X6	11280956	340	485	35	0.2	0.45	0.014	0.011	0.22	0	0.1	0	0.06	0
SCH160. SEAMLESS BLK NIPPLES 2X71/2	11280956	340	485	35	0.2	0.45	0.014	0.011	0.22	0	0.1	0	0.06	0
SCH160. SEAMLESS BLK NIPPLES 2XCLOSE	11280956	340	485	35	0.2	0.45	0.014	0.011	0.22	0	0.1	0	0.06	0

Inspector: Liu Lujia		Q.C. Manager: Zhu Xuguang

This Material Conforms to
ASME Section II Edition 2013
Initialed By:
Date: feb 03/2015

HT # K3078 Page 1 of 1
1" x 1/2" SC 160 Swedge Nipple
PO-14-561-01-20

Current Date: Mon, 02 Feb 2015 21:54:09 +0000

Material Test Report

Report Number: 28475
Date: Mon, Sep 15th 2014
Description: 1" SWAGES & BULL PLUGS
Heat Treatment: AS ROLLED
Specification: A234-WPB/SA234-WPB
Material: C1022
Year of Revision:
CRN: 0A7470.5CR1
Comment: NACE MR0103-07
MR0175/ISO 15156-2-03
Additional Comment:

Chemical Analysis

Heat Code: K3078
Heat Number: NF14102211

C	0.180 ✓	Cu	✓ 0.100	Al	0.027
Mn	0.940 ✓	Ni	✓ 0.290	Ti	
P	0.007 ✓	Cr	✓ 0.050		
S	0.003 ✓	Mo	✓ 0.010		
Si	0.230 ✓	V	✓ 0.012		
N		Cb/Nb	0.002		

Carbon Equivalency Formula Used:
C+(Mn/6)+(Cr+Mo+V)/5+(Ni+Cu)/15
CE= 0.38

Mechanical Tests

Yield PSI: 52000 ✓
Tensile PSI: 77000 ✓
Elongation: 33 % @ 2"" ✓
Reduction of Area %: 66
Size: 1.315" RND
Brinell Hardness: 152

Charpy Impact Test

Individual Values: (V1) ft/lbs (V2) ft/lbs (V3) ft/lbs

This Material Test Report meets DIN 50 049/EN 10 204 3.1.B Standard 1995

We hereby Certify that the material described has been tested in accordance with the specifications, and the results are correct as contained in the records of the Company.

Lisa Bidines
Quality / H&S Manager

EDDCO...

Sarnia
Toll Free: 1-866-511-1381
By regular telephone at: 519-336-2960
By fax at 519-344-3181
Mailing Address: PO Box 999, 645 Keddco St. Sarnia, ON N7T 7K6

Edmonton
Toll Free: 1-800-661-3809
By regular telephone at: 780-438-4944
By fax at 780-435-3917
Mailing Address: 4120 - 78 Av. Edmonton, AB T6B 3M8

This Material Conforms to
ASME Section II Edition 2013
Initialed By: W
Date: Feb 03/2015

HT # K2871
1/2" x 3/8" SC 160 Swedge Nipple
PO-14-561-01

Current Date: Mon, 02 Feb 2015 21:55:10 +0000

Material Test Report

Report Number: 26976
Date: Mon, Dec 9th 2013
Description: 1/2" SWAGES & BULL PLUGS
Heat Treatment: AS ROLLED
Specification: A234-WPB/SA234-WPB
Material: C1022
Year of Revision:
CRN: 0A7470.5CR1
Comment: NACE MR0103-07
MR0175/ISO 15156-2-03
Additional Comment: ASME SECTION II SA234 WPB 2013

Chemical Analysis

Heat Code: K2871
Heat Number: 031066

C	0.190	Cu	0.000	Al	0.037
Mn	0.900	Ni	0.090	Ti	0.000
P	0.009	Cr	0.070		0.000
S	0.022	Mo	0.030		0.000
Si	0.240	V	0.000		0.000
N	0.000	Cb/Nb	0.000		0.000

Carbon Equivalency Formula Used:
C+(Mn/6)+(Cr+Mo+V)/5+(Ni+Cu)/15
CE= 0.37

Mechanical Tests

Yield PSI: 49700
Tensile PSI: 76000
Elongation: 33 % @ 2"
Reduction of Area %: 65
Size: .840" RND
Brinell Hardness: 149

Charpy Impact Test

Individual Values: (V1) ft/lbs (V2) ft/lbs (V3) ft/lbs

This Material Test Report meets DIN 50 049/EN 10 204 3.1.B Standard 1995

We hereby Certify that the material described has been tested in accordance with the specifications, and the results are correct as contained in the records of the Company.

Lisa Bidtnes
Quality / H&S Manager

KEDDCO

Sarnia
Toll Free: 1-866-511-1381
By regular telephone at: 519-336-2960
By fax at 519-344-3181

Mailing Address:
PO Box 999,
645 Keddco St
Sarnia, ON
N7T 7K6

Edmonton
Toll Free: 1-800-661-3809
By regular telephone at: 780-438-4944
By fax at 780-435-3917

Mailing Address:
4120 - 78 Av.
Edmonton, AB
T6B 3M8

This Material Conforms to ASME Section II Edition 2013
Initialed By:
Date: feb 03/2015

SSAB

St. Paul, MN 55164-0303

Test Certificate

Form TC1: Revision 1: Date 31 Oct 2000

Customer:
SAMUEL & SON LIMITED
(A DIVISION OF SAMUEL SALES)
2360 DIXIE ROAD
MISSISSAUGA
ON L4Y1Z7

Customer P.O.No.: U1492 & 41-371004 | **Mill Order No.** 41-371036-03 | **Shipping Manifest:** PR089717

Product Description: CSA G40.21(2004)44/300/38W;ASTM A36(08) A709(09A)36/ASME SA36(10) CSA G40.21(2004)260W

Ship Date: 12 Aug 13 | **Cert No:** 041162337
Cert Date: 12 Aug 13 | (Page 1 of 1)

Size: 0.250 X 96.00 X 240.0 (IN)

Tested Pieces:				Tensiles:						Charpy Impact Tests							
Heat Id	Piece Id	Tested Thickness	Tst Loc	YS (KSI)	UTS (KSI)	%RA	Elong % 2in 8in	Tst Dir	Average Hardness	Abs. Energy(FTLB) 1 2 3 Avg	% Shear 1 2 3 Avg	Tst Tmp	Tst Dir	Tst Siz (mm)	BDWTT Tmp %Shr
A3G237	0711	0.254 (T.L.C)	L	59	71		27	T							
			C	57	70		23	T							
A3G237	0714	0.254 (T.L.C)	L	58	71		21	T							
			C	59	71		25	T							

Chemical Analysis

Heat Id	C	Mn	P	S	Si	Tot Al	Cu	Ni	Cr	Mo	Cb	V	Ti	B	N	ORGN
A3G237	.16	.84	.014	.004	.05	.031	.28	.11	.15	.03	.001	.004	.007	.0001	.0080	USA

MERCURY IS NOT A METALLURGICAL COMPONENT OF THE STEEL AND NO MERCURY WAS INTENTIONALLY ADDED
DURING THE MANUFACTURE OF THIS PRODUCT
MATERIAL MARKED WITH AN ASTERISK IS PRODUCED FROM COIL
PRODUCTS SHIPPED:
* A3G237 0713 PCES: 30, WGT: 49006

This Material Conforms to
ASME Section II Edition 2004
Initialed By: G
Date: OCT 16/2013

1/4 MSPL
29@8'x20'
Ht # A3G237
Sept 6/13

(P) Cust Part #:

WE HEREBY CERTIFY THAT THIS MATERIAL WAS TESTED IN ACCORDANCE WITH, AND MEETS THE REQUIREMENTS OF THE APPROPRIATE SPECIFICATION

Chad Falteysek
CHECKED BY

EVRAZ | EVRAZ INC. NA
Evraz Oregon Steel 14400 N. Rivergate Blvd., Portland, Oregon 97203

REPORT CHEMICAL/PHYSICAL TESTS

CERTIFICATE NO.	DATE	PAGE
1325554	Sep 19, 2013	1

ISO 9001 REGISTERED U.S. PLATE PRODUCER

SOLD TO

FAB-U-TECH INDUSTRIES, INC.
1204 - 8TH STREET
NISKU, AB T9E 7M1
CANADA

FAB-U-TECH INDUSTRIES, INC.
1204 - 8TH STREET
NISKU, AB T9E 7M1
CANADA

MILL ORDER NO.	DATE
268688	
CUSTOMER ORDER NO.	
33175	
JOB/REQ. NO.	
SHIPPING NO.	DATE
1325554	09/19/2013
CARRIER	
BURLINGTON NORTHERN	
CAR/TRUCK NO.	
ORANGE	

THIS MATERIAL HAS BEEN MANUFACTURED, TESTED AND FOUND TO MEET THE SPECIFICATIONS AND PURCHASE ORDER REQUIREMENTS
STRUCTURAL QUALITY PLATE CSA G40.21-04 38W (260W) CSA G40.21-04 44W (300W) ASTM A36-12/ASME SA36 2010/11 ADD..

PHYSICAL PROPERTIES

ITEM NO	DESCRIPTION	HEAT NO.	SLAB	YIELD PSI X 100	TENSILE PSI X 100	% ELONG 8"	% ELONG 2"	% RA	HARDNESS BHN	BEND TEST	IMPACTS
1	0.2500 X 120.000ME X 240.000 SCHEDULE B:7208.52.00.93										
	2 PCS 4084 LBS ^	N00111		488	730	23					
	1 PC 2042 LBS ^	N00117		496	720	23					
	3 PCS 6126 LBS TOTALS										

This Material Conforms to ASME Section II Edition 20..
Initialed By: @
Date: OCT 16/2013
1/4 mspl
1@10'x20'
~~Ht~~ * N00117
Oct 8/13

CHEMICAL ANALYSIS

HEAT NO.	C	Mn	P	S	Si	Cu	Ni	V	Cb	Al	Cr	Mo	Ti	B	N	Ca			CE	McQuaid Ehn Grain Size
^N00111	.19	.89	.015	.006	.26	.02	.04	.007	.005	.047	.02	.00			.0060					
^N00117	.18	.90	.016	.010	.27	.01	.04	.008	.005	.043	.02	.00			.0057					

HEATS INDICATED WITH (+) WERE MELTED & MANUFACTURED IN THE USA. HEATS INDICATED WITH (^) WERE ROLLED IN THE USA.

..... END OF REPORT .....

I certify the above to be correct as contained in the records of EVRAZ INC. NA By _____ Richard Deschand Quality Coordinator

½" 3M Coupling SA105N
HT # 6935
14-561-01-24

CERTIFIED MILL TEST REPORT

The Best Value - Price, Quality, Service All The Time.

LOG NO. F00000000067235

BONNEY FORGE CORPORATION
P.O BOX 330 • 14496 CROGHAN PIKE • MOUNT UNION, PA 17066-0330
(814) 542-2545 • (800) 345-7546 • FAX (814) 542-4906
www.bonneyforge.com

CUSTOMER: NOV WILSON CANADA ULC (N)

DATE 12/18/2014

CUSTOMER ORDER NO.: 25387150

BONNEY ORDER NO. B000179299

SHIP TO: NOV WILSON CANADA ULC (N)
(EDMONTON)
2603 - 76 AVENUE
EDMONTON AB T6P 1P6
Canada

This Material Conforms to ASME Section II Edition 2013
Initialed By:
Date:

ITEM	QUANTITY	LOT NO.	GRADE OR SPECIFICATION NO. CHEMICAL ANALYSIS, PHYSICAL PROPERTIES, REMARKS:
		59558	2 2M A105N TEE T SA/A105N Al 0.024 C 0.220 Co 0.003 Cr 0.030 Cu 0.050 Mn 1.040 Mo 0.004 N 0.005 Nb 0.015 Ni 0.020 P 0.005 S 0.022 Si 0.250 V 0.004 CE(Long Formula) = 0.41 T/S(PSI) 82,277 Y/S(PSI) 56,713 EL(%) 35.50 RA(%) 64.19 Brinell 135 BHN 137 BHN
90	300	59532	1/2 3000 A105N 90EL T SA/A105N 3967 Al 0.018 C 0.210 Cb 0.000 Co 0.003 Cr 0.040 Cu 0.050 Mn 1.010 Mo 0.005 Nb 0.009 Ni 0.020 P 0.010 S 0.017 Si 0.220 V 0.004 CE(Long Formula) = 0.39 T/S(PSI) 74,226 Y/S(PSI) 51,858 EL(%) 34.80 RA(%) 66.07 Brinell 135 BHN 135 BHN
100	300	6935	1/2 3M A105N COUP T SA/A105N 3901 Al 0.027 C 0.200 Co 0.003 Cr 0.040 Cu 0.060 Mn 1.030 Mo 0.005 N 0.003 Nb 0.012 Ni 0.020 P 0.006 S 0.020 Si 0.270 V 0.004 CE(Long Formula) = 0.39 T/S(PSI) 72,575 Y/S(PSI) 49,590 EL(%) 36.40 RA(%) 62.51 Brinell 132 BHN 132 BHN
110	250	59578	1/2 3000 A105N TEE T SA/A105N 4035 Al 0.035 C 0.210 Co 0.002 Cr 0.060 Cu 0.030 Mn 1.010 Mo 0.006 N 0.003 Nb 0.014 Ni 0.020 P 0.004 S 0.015 Si 0.220 V 0.003 CE(Long Formula) = 0.40 T/S(PSI) 74,177 Y/S(PSI) 51,420 EL(%) 39.55 RA(%) 59.34 Brinell 135 BHN 135 BHN

We certify that the data on this sheet is a true copy taken from our records of material furnished us by the production mill, or as obtained by additional laboratory checks.

by Kylee Ruiz
Kylee Ruiz
QUALITY PROCESS MANAGER

CMTR: REV2